ROHDE & SCHWARZ

INDUCTANCE METER TYPE LRT

Übersetzung von
nach R 16600

INDUCTANCE METER TYPE LRT

L Range 0.1 µH - 1 H

Q Range 2 - 1000

Zusammengestellt
nach R 17462

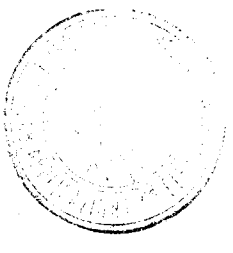

Printed in Western Germany

Supply of Replacements

Replacements are supplied on request by your nearest R&S agents or the principals ROHDE & SCHWARZ, D 8000 München 80, Mühldorfstraße 15; telephone (0811) 401981; telex 05-23703; telegram rohdeschwarz muenchen.

In your own interests, please let us have the following specifications when ordering replacements:

(a) Reference Number and R&S Stock Number of the defective component (according to parts list).

(b) Type or Order Number (BN) and Serial Number (FNr.) of the equipment (e.g. according to front-panel engravings).

Please specify the exact address in order to avoid unnecessary delays in delivery.

"Zusammenstell-Vorschrift"

The "Zusammenstell-Vorschrift" is a reference list specifying the different parts of the instruction book. With the aid of this list (ZV), it is possible to check up on the latest amendment (ÄZ) of the parts lists, circuit diagrams and drawings, and to find out whether all specified parts are in fact included in the instruction book.

Sections that are missing in the instruction book but listed in the "Zusammenstell-Vorschrift" were either not available when the instruction book was compiled or have been omitted unintentionally. Please inform us in this case, indicating the reference number (R-Nr.) of the list in the lower right-hand corner and the item number (Pos.-Nr.).

Table of Contents

1.	Specifications
1.1	Uses
1.2	Technical Data
1.3	Accessories
1.4	Description
1.5	Recommended Accessories
2.	Preparation for Use and Operation
2.1	Preparation for Use
2.1.1	Adjusting the Set to the Local AC Supply Voltage
2.1.2	Setting up
2.1.3	Setting the Mechanical Zero of the Meter
2.1.4	Switching on
2.2	Operation
2.2.1	Connection of a Coil
2.2.2	Measurement of Inductances from 0.1 µH to 1 H and Q's from 2 to 1000
2.2.2.1	Selecting the Characteristic of the Meter Amplifier
2.2.2.2	Selecting the Coupling between the Oscillator and Test Circuit
2.2.2.3	Tuning to Resonance and Reading
2.2.3	Accuracy and Sources of Error in Inductance Measurement
2.2.3.1	Influence of Self-capacitance
2.2.4	Accuracy and Sources of Error in Q Measurement
2.2.4.1	Q Error for Coils of High Inductance and High Q
2.2.4.2	Q Error for Coils of Low Inductance
2.2.5	Measurement of Inductances < 0.1 µH
2.2.6	Measurement of Inductances > 1 H
2.2.7	High-accuracy L Comparison Measurement
2.2.8	Coil-C_s Measurement
2.2.9	Measurement of the Resonant Frequency of Parallel Resonant Circuits
2.2.10	Design of Coils with Maximum Q Using the LRT
2.2.10.1	Shifting the tanδ Minimum Towards Lower Frequencies
2.2.10.2	Shifting the tanδ Minimum Towards Higher Frequencies

2.2.10.3	Measuring the Losses of a Coil at Various Frequencies
2.2.10.4	Design of a Coil of Maximum Q with an Operating Frequency Below the LRT Test Frequency
2.2.10.5	Design of a Coil with an Operating Frequency Above the LRT Test Frequency

3. Maintenance and Repair

3.1	Maintenance
3.1.1	Storage
3.1.2	Performance Check
3.1.2.1	L Calibration Throughout the Frequency Range
3.1.2.1.1	Frequency Calibration of the Oscillator
3.1.2.1.2	Checking the Test-circuit Capacitance
3.1.2.1.3	Checking the Self-capacitance
3.1.2.2	L Calibration with L Standards
3.1.2.3	Q Calibration
3.1.2.3.1	Checking the Oscillator Voltage Amplitude
3.1.2.3.2	Checking the Test-circuit Exciting Voltage
3.1.2.3.3	Checking the Meter Amplifier
3.1.2.3.3.1	Linearity in Q Measurements
3.1.2.3.3.2	Frequency Response
3.1.2.3.3.3	Indication in L Measurements
3.1.2.3.3.4	Input Impedance
3.1.2.3.4	Test Report for Check of Q Reading
3.1.2.3.5	Evaluation of the Results
3.1.2.4	Checking the Self-C Measurement
3.1.3	Electrical Maintenance
3.1.3.1	Oscillator Frequency Adjustment
3.1.3.1.1	Adjusting the Inductance of the Oscillator Coils
3.1.3.1.2	Adjusting Trimmers C13 to C20
3.1.3.1.3	Adjusting the Oscillator Variable Capacitor
3.1.3.2	Adjusting the Test Circuit
3.1.3.2.1	Adjusting the Test-circuit Capacitance
3.1.3.2.2	Adjusting the Test-circuit Self-capacitance
3.1.3.2.3	Adjusting the Test-circuit Wiring Inductance

3.1.3.3	α Calibration
3.1.3.3.1	Adjusting the Oscillator Voltage Amplitude
3.1.3.3.2	Adjusting the Test-Circuit Exciting Voltage
3.1.3.3.3	Adjusting the Meter Amplifier
3.1.3.3.3.1	Adjusting the Zero Suppression for the L-MEAS. Position of the Meter Amplifier
3.1.3.3.3.2	Adjusting the Input Impedance
3.1.4	Mechanical Maintenance
3.2	Circuit Description
3.2.1	Oscillator
3.2.2	Coupling and Division of the Oscillator Voltage
3.2.3	Test Circuit
3.2.4	Meter Amplifier
3.2.5	Power Supply
3.3	Mechanical Construction
3.4	Repair
3.4.1	Repair of the Power Supply
3.4.2	Repair of the Oscillator
3.4.2.1	Repair of the Electrical Components
3.4.2.2	Repair of the Mechanical Components
3.4.3	Repair of the Test Circuit
3.4.4	Repair of the Meter Amplifier

Translations for Figs. 1 - 12

Figs. 1 - 12

Supplement to Standard Translations for Parts Lists

Translations for Drawings and Diagrams

Parts Lists

Drawings and Diagrams

Compilation Schedule (Zusammenstell-Vorschrift)

1. Specifications

1.1 Uses

The Inductance Meter Type LRT permits direct measurement of coil inductance in the range 0.1 µH to 1 H and of coil Q from 2 to 1000. The measurement accuracy is ±1% ±0.01 µH for inductance measurements with Q > 10 and ±10% for Q measurements, a correction being necessary when the coil whose Q is measured has an L near the range edges or the test-item Q is > 300. The inductance of a wire loop about 5 cm long is measured just as easily and as quickly as that of a ferrite core coil of up to 1 H. Coils up to 10 H can be measured indirectly by a simple difference measurement.

Distributed coil capacitance and the resonance frequency of parallel resonant circuits are likewise readily measured with the LRT. The sensitive meter amplifier permits very accurate L comparison to be carried out with an uncertainty of ±0.1%.

The maximum voltage applied to the test item at resonance is 60 mV. This very low and accurately known test voltage and the possibility of reading Q at the LRT test frequency are the main assets of the LRT as compared to the earlier Inductance Meter Type LARU BN 610 and other competitive instruments. When high-permeability core materials are measured it is absolutely necessary to employ a low test voltage; otherwise the inductance and Q measurements would be invalidated by too high field strength.

This versatile instrument is equally suitable for accurate measurements and adjustments of coils in laboratories and test departments and for production tests, say in winding shops, where coils are measured, trimmed or checked for shorts between windings or to chassis.

An important advantage of the LRT as against bridge measurements lies in the simpler test setup and quicker reading. Moreover, the LRT test frequency is normally of the same order as the future operating frequency of the coil, whereas in the measurement of low inductances with AF bridges appreciable differences may be found between the

parallel L and the series L as a result of the test-item Q being low at the highest bridge frequency. (See "Do you Measure the Inductance Properly?" News from Rohde & Schwarz No. 14)

The Inductance Meter Type LRT is easy to operate. The proper scale automatically appears in the front-panel window when the range is selected. This method practically rules out the possibility of reading errors, so that the instrument can be operated by semiskilled personnel.

Two screw terminals with 4-mm holes for banana plugs and transversal holes for wires up to 2 mm in diameter are provided for the connection of the test item. Quick-connect/disconnect terminals (see Recommended Accessories) are available which accelerate series of measurements decisively since the leads of the test item need only be inserted between the contact springs instead of laid around the knurled terminal and screwed on.

The Inductance Meter Type LRT contains no parts that are sensitive to shock or vibration. The wiring is designed to withstand the rough handling in workshops or mobile use in a test van. All components that determine the accuracy are selected with special care and do not require readjustment for years of operation. The oscillator stability, for example, is ensured by carefully glued pot-core coils with large air gaps and a pre-aged variable capacitor fixed with stress-relief.

Easy access to all subassemblies and a simple way of mounting facilitate maintenance and repair work. All expendable parts, such as potentiometers, switches and scale drives are of best quality. Should a repair nevertheless become necessary, it can be carried out by a skilled technician by means of simple equipment.

1.4 Description

The Inductance Meter Type LRT operates according to the resonant-circuit method. The unknown inductance L_x and the fixed test-circuit capacitor C_t form a parallel resonant circuit whose resonant frequency is solely dependent on the connected inductance L_x. An oscillator with a continuously variable frequency excites the test circuit via a capacitive coupling adjustable in four steps.

When measuring, the oscillator frequency is varied so that the meter amplifier indicates maximum voltage, i.e. the test-circuit resonant frequency f_{res} is equal to the oscillator frequency f_o. Then:

$$f_{res} = f_o = \frac{1}{2\pi\sqrt{C_t \quad L_x}}$$

Therefrom

$$L_x = \frac{1}{(2\pi f)^2 C_t}$$

The scales of the variable capacitor of the oscillator are calibrated in terms of frequency and self-inductance to permit direct readings of L_x.

The resonant voltage E_t directly depends on the oscillator voltage E_1 of the test circuit, i.e. the amount of coupling C_c and the Q-factor of the test item. (The losses of the test-circuit capacitor are so low that with a measurement accuracy of $\pm$10% they need only be considered if the test-item Q > 300.) Thus

$$\frac{E_t}{E_1} = \frac{Q}{1 + \frac{C_t}{C_c}}$$

$$E_t = \frac{Q}{1 + \frac{C_t}{C_c}} E_1 \quad .$$

Thus the scale of the panel meter can be directly calibrated in terms of Q, the Q range being determined by the amount of coupling.

The characteristic of the meter amplifier must be linear to ensure that the scale is also linear. The sensitivity obtainable in Q measurements is, however, not sufficient for comparative inductance measurements to within 0.1% or absolute measurements to within ±1% of coils with Q < 20. Since the resonance curve of such coils is rather flat the voltage maximum cannot be adjusted with sufficient accuracy. If switch S3 is set to L-MEAS. the meter amplifier operates with zero suppression, adjustable with the INDICATION knob (potentiometer R55), and the sensitivity of indication is increased by a factor of about 5. Since only the peak of the resonance curve is then indicated the accurate maximum, i.e. the unknown L, is clearly determined even for coils with high loss. The Q of the coil can be read on the meter if switch S3 is set to Q-MEAS.

The circuit design is such that switching from Q measurement to L measurement and variation of the coupling do not influence the test-circuit and oscillator frequencies.

In addition to L and Q, the LRT permits the self-capacitance of coils to be determined by means of two measurements and a simple calculation. As for the L measurement, first adjust for maximum voltage in the test circuit while C_t is in circuit and read the frequency f_L instead of the inductance. Then separate the test-circuit capacitor from the test circuit by setting S2 to SELF-C. The capacitance connected in parallel to the test item thus consists only of the internal coupling and wiring capacitance C_i = 30 pF and the self-capacitance C_s of the tested coil. Then adjust for maximum voltage of the test circuit at a higher frequency f_E and read f_E. The self-capacitance of the coil is then

$$C_s = \left(\frac{f_L}{f_E}\right)^2 C_t - C_i$$

If C_t and C_i are replaced by their constant numerical values

$$C_s = \left(\frac{f_L}{f_E}\right)^2 5000 - 30$$

1.5 Recommended Accessories

a) 1 Cover KBJ 80559 for cabinet

If the set is frequently transported the front panel should be protected by this cover.

b) 2 Terminals BN 5501-62

The quick-connect/disconnect terminals are directly fixed to the test terminals of the set and facilitate the connection of the test items. The leads of the coil need no longer be fixed with the knurled screw terminals but can simply be pushed through the contact clips. If bulk measurements are often to be carried out the use of these terminals is strongly recommended.

2. Preparation for Use and Operation

2.1 Preparation for Use

Legend to front-panel view Fig. 2:

1 Screw fixing the instrument in the cabinet

2 Frequency scale
3 Inductance scale
} switched by range selector 11

4 Cursor for L and f scales, actuated with knob 6

5 Same as 1

6 Tuning knob, for variation of the oscillator frequency within a range

7 Pilot lamp, indicating the "on" condition

8 Same as 1

9 On/off switch

10 Knob for the adjustment of the zero suppression of the meter amplifier (only if 16 is at L-MEAS.)

11 Range selector (7 L ranges)

12 a) Switch selecting the coupling capacitors for L and Q measurements
b) Switchover to self-capacitance measurement

13
14
} Test terminals

15 Same as 1

16 Function selector for Q measurement or L measurement; in Q measurements the meter amplifier operates linearly, in L measurements with suppressed zero, i.e. increased sensitivity.

17 Mechanical zero adjustment of meter

18 Meter indicating the voltage maximum of the resonance curve adjusted with 6 or the Q factor in the corresponding position of 16 .

2.1.1 Adjusting the Set to the Local AC Supply Voltage

The set is factory-adjusted for operation from 220 V AC supply. To adapt it for operation from 115, 125 or 235 V, loosen the screws 1 , 5 , 8 , 15 on the front panel and withdraw the chassis from the cabinet. Be sure that the power plug has been drawn out of the wall socket. The tapping panel is at the rear. A normal-lag 0.05-A fuse is suitable for 220 V and 235 V AC supply, a normal-lag 0.1-A fuse for 115 V or 125 V. Insert the proper fuse into the pair of contact clips identified by the available voltage value. AC supply voltage fluctuations from +10% to -15% and frequency fluctuations between 47 and 63 Hz do not affect the accuracy of the instrument.

2.1.2 Setting up

The accuracy of the instrument is guaranteed for L measurements at temperatures from +10 to +35°C and for Q measurements from +15 to +35°C. More adverse temperature conditions do not cause any failure in the functioning, but in the extended range from 0 to +45°C the L error increases to ±2% and the Q error to +12%/-20%. Do not operate the LRT in the immediate vicinity of a strong signal source since a spurious deflection may result on the meter, especially in the SELF-C position, due to the high input impedance and sensitivity of the meter amplifier.

A metal bow provided at the bottom permits the inductance meter to be set up in an inclined position, which facilitates the reading.

2.1.3 Setting the Mechanical Zero of the Meter

Adjust 17 by means of a small screwdriver to correct the mechanical zero of the meter.

2.1.4 Switching on

Connect to the AC supply by introducing the 3-pin European plug of the power cable into the rear socket of the set and the safety plug (with earthing contact) into the wall socket. Switch on with the power switch 9 . The pilot lamp 7 then lights. The set is ready for operation, no warm-up being required. No calibration is necessary.

2.2 Operation

2.2.1 Connection of a Coil

Connect the coil in such a way that the lead that lies on earth potential in operation is at the right-hand terminal 13 . In the case of shielded coils the L values with and without the shielding must be distinguished. A greater L may be obtained without the shielding. If coils with strong stray fields, in particular large air-core coils, are measured an iron table top may introduce errors. When coils of low inductance have long leads the influence of the leads on the measurement accuracy should be determined.

2.2.2 Measurement of Inductances from 0.1 µH to 1 H and Q's from 2 to 1000

The LRT operates on the resonance method (see 1.4). The frequency of the oscillator is so varied that it equals the test-circuit resonant frequency. The voltage maximum appearing at the test-circuit resonance is made visible by the meter amplifier and serves as criterion. The measurement proper, i.e. searching for resonance, must be preceded by the selection of the amplifier characteristic (see 2.2.2.1) and of the coupling (see 2.2.2.2) between the oscillator and test circuit.

2.2.2.1 Selecting the Characteristic of the Meter Amplifier

Select the mode of operation L-MEAS. or Q-MEAS. with switch 16 . The only difference lies in the characteristic of the meter amplifier.

In the L measurement the zero is suppressed. The full-scale value of the meter corresponds to a voltage variation of about 15 mV. This high sensitivity is necessary in order to find the maximum of the resonance curve and thus the L of coils with Q < 20.

In the Q measurement the amplifier characteristic is linear and 80 mV give full-scale deflection. The indication is less sensitive and covers a much wider range. Since the voltage maximum is recognized even with coils of Q < 20 it is recommended that the Q-MEAS. position of switch 16 should be selected for finding the resonance. This saves the sensitivity adjustment with knob 10 during the measurement and allows direct reading of Q without changing knob 16 .

2.2.2.2 Selecting the Coupling between the Oscillator and Test Circuit

The amount of coupling between the oscillator and test circuit is adjusted with knob 12 . Dots of different sizes are engraved on the front panel round the knob to mark different values. Together with the coupling, the Q range is selected (upper marking of knob 12). Since the test-circuit voltage increases proportionally to the Q of the test item and the amount of coupling, take the measurement in the highest Q range and with the loosest coupling, to maintain, as far as possible, a constant test-circuit voltage. Thus the voltage across the test item never exceeds 80 mV unless the meter amplifier is overdriven. If the Q of the test item is unknown select the tightest coupling when searching for resonance; if the Q is roughly known select the appropriate Q range.

2.2.2.3 Tuning to Resonance and Reading

If the order of magnitude of the coil L is known select the corresponding range with knob 11 . Otherwise, start in the lowest L range, i.e. at the highest test frequency, to search for resonance in order to avoid tuning to a harmonic. This risk, however, exists only with tightest coupling and for coils of very high Q since the harmonic content of the oscillator is very low.

Turning knob 6 tune the pointer 4 through its range until the meter deflection is maximum. If the Q was initially unknown and turns out to be > 30, reduce the coupling with knob 12. . Read L on the black L scale, using the double hair line engraved on the pointer to avoid parallax. Reading errors are not likely to occur since only the appropriate scale appears in the window of the front panel.

If for coils of Q < 20, which are rather seldom encountered, the L measurement is not accurate enough, set 16 to L-MEAS. The sensitivity of the meter amplifier is thus increased and the L can be accurately adjusted. Using knob 10 adjust the zero suppression so that the pointer of meter 18 is in the centre of the scale at resonance. In the last third of the scale (right-hand end) the indication becomes less sensitive since the pointer deflection is limited to protect the meter.

2.2.3 Accuracy and Sources of Error in Inductance Measurement

As specified in 1.2, coils with Q > 10 can be measured with an accuracy of ±1% ±0.01 µH. The specification "±0.01 µH" means that below 1 H an absolute error of ±0.01 µH adds to the error of 1%. For example, a coil of 0.5 µH is measured only with 3% accuracy: 1% error of the LRT ±(0.01/0.5) x 100 = ±2% absolute error. This applies to coils whose self-capacitance is within the limits specified in the following section 2.2.3.1. If the self-capacitance is higher the L reading must be corrected.

2.2.3.1 Influence of Self-capacitance

According to section 1.4, the unknown coil L_x forms a parallel resonant circuit with the built-in test-circuit capacitor C_t (5000 pF), where

$$L_x = \frac{1}{\omega^2 C_t}$$

As each winding, in addition to its inductance, has a self-capacitance C_s (or winding capacitance)- which is between 1 pF and several 1000 pF, depending on the type of coil - and since the calibration of the LRT cannot be valid for all possible self-capacitance values, an appreciable measurement error may result. Correction for this error is possible if the self-capacitance C_s lying in shunt with the test-circuit capacitor C_t is known. To render the correction superfluous for most of the coils, a given amount of self-capacitance has been included in the calibration of the LRT:

$C_{s\ incl}$ = 0 pF in the 2 ranges 0.1 to 10 µH
$C_{s\ incl}$ = 10 pF in the 4 ranges 10 µH to 100 mH
$C_{s\ incl}$ = 20 pF in the range 100 to 1000 mH.

If the actual self-capacitance C_s of the coil differs from the value $C_{s\ incl}$ included in the calibration the resulting measurement error is

$$F\,[\%] = \frac{C_s - C_{s\ incl}}{5000}\ 100 \qquad [C_s \text{ and } C_{s\ incl} \text{ in pF}]$$

The following example shows that the error is small for the commonly-used coils and usually need not be corrected for: Let the measurement be carried out in the range 10 µH to 100 mH and $C_{s\ incl}$ = 10 pF. The self-capacitance of the coil be about 20 pF. This causes an error

$$F = \frac{20 - 10}{5000} \times 100 = 0.2\%$$

For coils with much higher self-capacitance, e.g. transformer windings, the following correction is necessary:

$$L_\omega = L_m \frac{5000}{5000 + C_s - C_{s\ incl}} = L_m\, k \qquad [C_s \text{ and } C_{s\ incl} \text{ in pF}]$$

where L_ω is the true inductance, L_m the inductance measured with the LRT. The correction factor k is given in Fig. 3 as a function of self-capacitance C_s. For example, if a self-capacitance of 100 pF and inductance of 200 mH are measured, the true inductance is

$$L_\omega = L_m\, k = 200 \times 0.984 = 196.8 \text{ mH}.$$

The self-capacitance can be measured with the LRT according to the method described in section 2.2.8.

Special attention should be paid to transformers. Fig. 4 shows the equivalent circuit of a transformer with two windings where the losses are neglected. On principle, the transformer may have three or more windings. L_1 and L_2 are the principal inductances of the primary and secondary windings. C_{s1} and C_{s2} the winding capacitances, and δL_1 and δL_2 the leakage inductances. For example, the leakage inductance δL_1 is that part of the primary inductance whose magnetic flux does not penetrate through the secondary winding and cannot produce any voltage in this winding. The capacitance of a transformer winding may be between 25 pF and several 100 pF; it depends mainly on the geometry of the winding and on the wire insulation, but only slightly on the number of turns.

The impedance Z_2 connected at the secondary is transformed to the primary with the square of the turns ratio $n_1/n_2 = a$ and appears as $Z_1 = Z_2\ a^2$. The winding capacitance C_{s2} has the effect of an impedance $Z_2 = 1/\omega C_{s2}$ connected to the secondary, which appears at the primary as $Z_1 = (1/\omega C_{s2})\ a^2$. Considering the admittances ωC_{s1} and $\omega C_{s2}\ a^2$, it is clear that at the primary side the sum of C_{s1} and $C_{s2}\ a^2$ is effective. If $n_2 < n_1$, in particular $n_2 << n_1$, and if the measurement is taken at the primary C_{s2} can be neglected. If, however, $n_2 > n_1$ or $n_2 >> n_1$, e.g. $a = n_2/n_1 > 10$, only $C_{s2}a^2$ has an appreciable effect on the primary side.

This transformed capacitance, apart from requiring a correction of the measured L, may represent such a low impedance that it almost corresponds to a short-circuit for ωL_1 and may even be lower than the impedance of the leakage inductance δL_1. When a bridge is used for the impedance measurement this difficulty can be turned round by selecting a very low test frequency. The frequency of the LRT, however, is not freely selectable (because of the method employed). If the winding geometry of the transformer is known the inductance measurement should be taken only at the winding that has the greatest number of turns; in this

case it is very unlikely that the result should be invalidated by the transformed winding capacitances. The measurement with the LRT is, of course, only possible if the inductance of this winding is not greater than 1 H. For unknown transformers it is best to measure, if possible, the inductances and capacitances of all windings and to judge the results critically. A thumb rule is: The measured L differs not more than 10% from the true L if the turns ratio fulfils the condition

$$a \leq \sqrt{\frac{500}{C_{s2}}}$$

Example 1

Values

$L_1 = 0.9$ H
$L_2 = 3.6$ H
$a = 2$

$a^2 = 4$
$\delta = 0.5\%$
$\delta L_1 = 4.5$ mH
$\delta L_2 = 18$ mH
$C_{s1} = 100$ pF
$C_{s2} = 100$ pf

Measurement of L_1

Effective capacitance:
$C_s = C_{s1} + C_{s2}a^2 = 100 + 100 \times 4 = 500$ pF
L measured with LRT:

$$L_m = L_1 \frac{5000+C_s-C_{s\ incl}}{5000} = 0.9 \times 1.096 = 0.98 \text{ mH}$$

The leakage inductances here do not enter into the measured result.

Measurement of L_2

Effective capacitance:
$C_s = C_{s2} + C_{s1}a^2 = 100 + 100/4 = 125$ pF

L cannot be measured since $L_2 > 1$ H.

Example 2

Values

$L_1 = 1$ mH
$L_2 = 100$ mH
$a = 10$
$a^2 = 100$
$C_{s1} = 30$ pF
$C_{s2} = 100$ pF

Measurement of L_1

Effective capacitance:

$C_s = 30 + 100 \times 100 = 10030$ pF

L measured with LRT:

$L_m = 1 \times 15020/5000 = 1 \times 3 = 3$ mH

This cannot be called a measurement; the correction is not accurate enough since C_s would have to be known accurately. Take the measurement at L_2.

Measurement of L_2

Effective capacitance:

$C_s = 100 + 30/100 = 100.3$ pF

L measured with LRT:

$L_m = 100 \times 1.016 \approx 102$ mH

Example 3

Values

$L_1 = 0.5$ H
$L_2 = 200$ H
$a = 20$
$a^2 = 400$
$\delta = 3\%$
$\delta L_1 = 15$ mH
$\delta L_2 = 6$ H
$C_{s1} = 100$ pF
$C_{s2} = 100$ pF

Measurement of L_1

Effective capacitance:

$C_s = 100 + 100 \times 400 = 40100$ pF

Apart from the requirement of the thumb rule $a \leq 2.2$, in this example the reactance $1/\omega C_s$ is much lower than ωL_1 even at the lowest test frequency of the LRT so that the principal inductance L_1 cannot be measured. A resonance is found at 13.4 mH, but this is the leakage inductance $\delta L_1 = 15$ mH less a value due to $1/\omega C_s$. Since $L_2 \gg 1$ H, such a transformer cannot be measured with the LRT. This example shows that an absolutely wrong result may be obtained if the thumb rule is neglected.

2.2.4 Accuracy and Sources of Error in Q Measurement

The error of ±10% for Q measurements is determined by the stability of the voltage exciting the test circuit, i.e, with an error-free capacitive voltage divider, by the genertor voltage and the accuracy of the meter amplifier. The additional error caused by the losses of the test-circuit capacitor for test items with Q > 300 can be corrected for by means of the correction curves.

Apart from these errors, which are distributed throughout the frequency range, the following error components appear near the range ends:

2.2.4.1 Q Error for Coils of High Inductance and High Q

If the test item has an L > 0.1 H and Q > 100 the input impedance of the meter amplifier damps the test circuit.

Example: The inductive impedance ωL of a coil of 1 H amounts to about 14 kΩ at an LRT test frequency of 2.2 MHz. With Q = 300 the resonant impedance (parallel equivalent circuit) $Z_{res} = Q\,\omega L \approx 4.2$ MΩ. The error due to the amplifier input impedance of about 55 MΩ is thus 7.1%. The error decreases with decreasing L and decreasing Q. For correction refer to the correction curves for Q measurements with high inductances (Fig. 6). If L > 0.1 H and Q > 100 it is advisable to estimate the error and to correct, if necessary.

2.2.4.2 Q Error for Coils of Low Inductance

The test-circuit inductance of the LRT is formed by the series connection of the test item and the wiring inductance. The latter is included in the calibration for L measurements, whereas in Q measurements an error results because of the low Q of the test-circuit inductance. The error increases with increasing Q and decreasing inductance of the test item. The correction curves for Q measurements with low inductance (Fig. 7) show that a correction of the measured value is necessary if L < 50 µH and Q > 100.

2.2.5 Measurement of Inductances < 0.1 µH

Inductances below 0.1 µH can be measured indirectly by means of a simple difference measurement using a coil L_h (wire loop) that can just be measured directly at the lower end of the lowest range (0.1 - 1 µH). First measure the inductance of the auxiliary coil L_h, connect L_x in series with L_h and measure the inductance of the series combination $L_s = L_h + L_x$. Then $L_x = L_s - L_h$. The mutual inductance coupling is here assumed negligible. This condition is roughly fulfilled by a measuring device consisting of a strip line laid around a plastic disc (Fig. 11). Thanks to the strip shape, the magnetic field is closely concentrated round the conductor, so that even small test items can be measured without disturbing coupling effects. The two ends of the loop are connected together by means of a plug plate of copper-plated hard glass fabric with two banana plugs spaced 30 mm apart. At the diametrically opposed point the loop is separated. Small sockets are provided to the left and right of the separation, at a distance of 5 mm. In the simplest case, these may be tubular rivets with an inside diameter slightly smaller than the diameter of the wire of the test item. For frequent uses, sockets of the kind supplied by various manufacturers, say, for the quick connection of semiconductors, are more convenient. Our experimental model was equipped with contact sockets made by Barnes Development Comp., Landsdowne Pa. 19050, USA. They make satisfactory contact with wire ganges of 0.5 to 1 mm. Suitable types are also available for thicker wires.

The measuring device is easy to make. Since a series production is not intended the required dimensions are given in Fig. 12.

The insulating disc carrying the copper strip was made of Ultramid-8 which is very easily workable. Any other heat-resistant dielectric may be used as well. The groove in the disc only serves to keep the copper strip in place and is not absolutely necessary. The plug plate carrying the two banana plugs should have a copper-plating as thick as possible to make the inductance of the leads negligible against that of the copper strip loop. The contact sockets are pressed into the dielectric disc and soldered to the copper strips for better contact. The holes of 2.8 and 2.7 mm diameter refer to the above-mentioned contact sockets of Barnes. The copper rollers determining the spacing between the plug plate and the dielectric disc may be replaced by stacked washers.

Measurement: Short the two separated ends of the copper strip with a wire link and introduce the device into the sockets of the LRT so far that its inductance is exactly 100 nH. The depth can be accurately limited by the knurled nuts of the terminals. Then insert the leads of the coil to be measured into the small sockets instead of the shorting link. The Inductance Meter then gives the reading

$$L_s = L_x + L_h = L_x + 100 \text{ nH}.$$

It is only necessary to deduct 100 nH from the reading in order to obtain the inductance L_x of the coil.

The device is so sensitive that an inductance variation of 1 nH is recognizable when the shorting wire is carefully withdrawn. A wire loop of 10 mm diameter was used to prove that the coupling between the test item and the auxiliary loop is small: the measured L was practically equal to the calculated inductance. The accuracy of the device depends mainly on the length of the coil leads; a variation of 1 mm corresponds to about 1 nH. Coils of less than 100 nH can therefore be measured only with an error of a few per cent, depending on their inductance. The 1 % error of the LRT is here no longer of importance.

With coils of such low inductance the Q reading of the L&T is usable for comparison only. It cannot be considered as an absolute value since the internal wiring resistances, the switch and the contact resistance of the resonant-circuit capacitor reduce the overall Q considerably and make it frequency-dependent. If the test sockets of the described device are shorted a Q of about 15 is obtained although the copper strip loop has a much higher Q.

2.2.6 Measurement of Inductances > 1 H

Inductances from 1 H to about 10 H can be measured indirectly by means of a coil L_h that can just be measured directly at the upper end of the highest range (100 - 1000 mH). First measure the inductance of the auxiliary coil L_h, then connect L_x in parallel with L_h and measure the inductance L_p of the parallel combination. Thus $L_x = (L_h L_p)/(L_h - L_p)$.

Take care to avoid any coupling between L_h and L_x. With increasing L_x the measurement accuracy decreases rapidly. For example, a coil of 10 H (in parallel with L_h = 1 H) can only be measured with an accuracy of $\pm$10%.

2.2.7 High-accuracy L Comparison Measurement

The sharp resonance indication in the range of indication MEASURING (switch 16 at L-MEAS.) permits comparison measurements to be made with an accuracy of ±0.1%. Because of the internal test-circuit capacitance, the difference between the self-capacitances of the standard coil L_{st} and the test coil L_x should not be greater than 5 pF. For example, if the standard coil had a self-capacitance of 50 pF and the coil to be tested or to be adjusted had a self-capacitance of 100 pF, the comparison measurement would be possible only with an accuracy of ±1%; that is to say, the accuracy could not be improved by using a standard coil. Nevertheless, comparison measurements can be made, in spite of widely differing self-capacitances of L_{st} and L_x, with the aid of an additional capacitance which offsets the difference between the two self-capacitances. In the above example, an additional capacitance of 50 pF would have to be connected across the coil L_{st} in order to equalize the self-capacitances.

To adjust the coil L_x to a standard L_{st}, first connect L_{st} and tune the LRT exactly for resonance. Then replace L_{st} by L_x and tune for resonance; thus $L_x = L_{st}$.

2.2.8 Coil-C_s Measurement

Two measurements and a simple calculation are necessary to find the self-capacitance C_s of a coil. For the first measurement, proceed as in the case of inductance measurements, but read frequency f_L indicated on the scale instead of the inductance. For the second measurement, throw the selector switch to SELF-C. Then rotate the tuning control towards higher frequencies until resonance is again obtained, the INDICATION control being so adjusted that tuning is possible in the MEAS. region. Read the frequency f_C indicated on the scale and calculate the self-capacitance from

$$C_s = \left(\frac{f_L}{f_C}\right)^2 5000 - 30. \qquad (pF)$$

This formula holds for the C_s values normally occurring. The following formula should be applied for values higher than about 100 pF:

$$C_s = \frac{5000\ (f_L/f_E)^2 - 30}{1 - (f_L/f_E)^2} \quad \text{(pF)}$$

The self-capacitance of a coil is obtained more easily and quickly from the nomograph Fig. 5. Due to the reading error, however, the accuracy is then poorer than that obtained with the formula.

The self-capacitance range begins at 0 pF; toward higher values, it is dependent on the Q of the coil to be tested. If the Q is insufficient the LRT will no longer indicate the resonance voltage. If the approximate Q of the coil at F_E is known it is possible to find out with the aid of Fig. 8 whether or not the self-capacitance of the coil can be measured with the LRT. There is moreover a lower limit to the measurement range, dependent upon the inductance of the coil, since the highest test frequency of the LRT is 4.5 MHz, i.e., the measurable self-capacitance decreases with increasing inductance. See Fig. 9.

When measuring the self-capacitance of transformer windings, refer to section 2.2.3.1. The transformed capacitances of the windings must be taken into account, i.e. check whether the measurement at one of the given windings seems useful. It would, for instance, be impractical to measure the self-capacitance of a winding of 100 turns and approx. 100 pF, if the transformer has a second winding of 500 turns which has also a self-capacitance of approx. 100 pF. At this transformation ratio = 5, a self-capacitance of approx. $100 + 100 \times 5^2 = 100 + 2500 = 2600$ pF is present across the low-impedance winding. The self-capacitance of the high-impedance winding, however, is readily measurable since the transformed capacitance is only approx. $100/5^2 = 4$ pF.

2.2.9 Measurement of the Resonant Frequency of Parallel Resonant Circuits

With the selector switch at SELF-C, the resonant frequency of a parallel resonant circuit can be measured, or adjusted to a specified value, if the capacitance or inductance of the circuit is variable.

If the resonant frequency of the circuit under test is entirely unknown, it is advisable to start looking for the resonance point in the highest frequency range, 2.1 to 4.5 MHz, to avoid tuning to a harmonic. It should be borne in mind when measuring resonant circuits having a small capacitance that the internal test-circuit capacitance C_i = 30 pF is across the circuit, thus reducing the resonant frequency.

In some cases, for example in the preliminary adjustment of band-pass filter circuits having a capacitance C of about 200 pF, the reduction of the resonant frequency due to C_i is not troublesome since the wiring and valve capacitances in the receiver generally have a value of 10 pF so that the frequency error of the preliminary adjustment is very small.

However, if the resonant frequency of a free resonant circuit is to be determined, first measure the inductance and then calculate the capacitance C across the coil from

$$C = \frac{1}{(2\pi f)^2 L} - C_i$$

The actual resonant frequency of the free resonant circuit is then obtained from

$$f_r = \frac{1}{2\pi\sqrt{LC}}$$

Whether the resonant frequency can be measured depends on the coil Q and the resonant-circuit capacitance C as well as on the highest adjustable frequency (4.5 MHz). See Figs. 8 and 9.

2.2.10 Design of Coils with Maximum Q Using the LRT

For use in selective circuits, the dissipation factor

$$\tan\delta = \frac{R}{\omega L}$$

or quality

$$Q = \frac{\omega L}{R}$$

of coils and chokes is of interest in addition to the inductance L. R is the series resistance representing the total coil loss.

Since the selectivity of a selective circuit or the frequency stability of an oscillator circuit improves with increasing Q, the aim is to design the coil such that the maximum Q is near the operating frequency. This can be readily accomplished by means of three points of the curve Q = f (f) measured with the LRT if the variation of the dissipation-factor minimum or Q maximum, both in absolute value and frequency, is known as a function of the copper or iron losses.

The variation of the dissipation factor tanδ as a function of winding resistance R_{Cu} and iron loss R_{Fe} is based on the following relations:

The winding resistance R_{Cu} is frequency-independent if the skin effect is neglected (Fig. 10a curve I); the eddy-current losses, which are the main component of the iron losses, increase quadratically with frequency (Fig. 10a curve II). By adding the two curves and referring the total loss to the inductance L, the curve of Fig. 10b is obtained. The dissipation factor $\tan\delta = \frac{R}{\omega L}$ (Fig. 10c) is obtained by dividing the $\frac{R}{L}$ value by $\omega = 2\pi f$. The horizontal portion of curve I Fig. 10a is transformed into branch I' falling with $\frac{1}{\omega}$ and curve II of Fig. 10a, rising with ω^2, gives branch II' which rises with ω.

Theoretically there is thus a defined minimum loss with the curve rising at 45° on both sides. The minimum lies at the frequency at which

copper losses = iron losses.

In practice, the tanδ minimum or Q [illegible] is not so sharp; the curve is flatter. The maximum can, however, be [illegible]ied in its amount and with respect to frequency on the basis of the above theory.

2.2.10.1 Shifting the tanδ Minimum Towards Lower Frequencies

The copper loss component R_{Cu}/L must be reduced. This can be accomplished if the winding space is not yet fully utilized by increasing the wire cross-section, otherwise by choosing a larger core offering more winding space or by using a material of higher permeability. In the latter case it must be checked whether the use of another core material would not increase the iron losses so as to counteract the shift of the tanδ minimum and the change in amount of the tanδ minimum. The higher permeability of the material involves a higher Q. Reduction of the number of turns and thus of the copper losses by making the air gap smaller, i.e. a higher A_L value with equal core size, [illegible] increase in the iron losses. The Q maximum is shifted towards lower frequencies but does not rise in its absolute value.

2.2.10.2 Shifting the tanδ Minimum Towards Higher Frequencies

The intersection point $R_{Cu} = R_{Fe}$ must be at a higher frequency (decrease of eddy-current losses); this is accomplished for laminated-core coils by using thin sheets, for ferrite coils by the introduction of an air gap. In the first case the absolute value of Q is increased; in the second case the reduced A_L value and thus increased number of turns require a smaller cross-section of the copper wire and thus do not give a reduction of the absolute value of the tanδ minimum.

2.2.10.3 Measuring the Losses of a Coil at Various Frequencies

The inductance and Q calibrations of the LRT refer to a fixed built-in short-circuit capacitor, i.e. direct measurement of the Q or L of a given coil is only possible at the test frequency of the LRT. The test-circuit

apacitor cannot be switched off. In the SELF-C position no Q
easurement is possible since the exciting voltage is not calibrated.

he resonant frequency of the test circuit can, however, be varied by
onnecting a known capacitance in parallel or series with the test-
ircuit capacitor. The dissipation factor of the capacitor used for
his purpose should not be poorer than 2.5×10^{-4}. Good mica, ceramic
nd synthetic capacitors fulfil this condition. Otherwise the measurement
ccuracy would be affected by the connection of the capacitor when
igh coil Q's are measured.

ince the Q reading refers to a particular voltage division between
he coupling capacitor and the test-circuit capacitor (see section 1.4)
he value measured with a changed test-circuit capacitance must be
orrected by a factor k. The frequency of the Q measurement can be
ead on the frequency scale.

2.10.4 Design of a Coil of Maximum Q with an Operating Frequency Below the LRT Test Frequency

nnect the following parallel capacitances C_p to the test circuit
apacitor to allow Q's to be measured below the LRT test frequency:

C_p (pF)	$C_{test\ circ.}$ pF	k $Q_{true}=Q_{read} \cdot k$	Frequency
0	5000	1	f_{LRT}
000	10000	2	$f_1=(f_{LRT}/1.41)$
000	20000	4	$f_2=(f_{LRT}/2)$
000	50000	10	$f_3=(f_{LRT}/3.18)$

Q has been measured at the four recommended frequencies f_{LRT}, f_1,
, f_3 the curve can be drawn in a chart (see Fig. 10d). The following

tendencies may appear: The test points of curve 1 show clearly that the maximum Q must be shifted towards lower frequencies; proceed according to section 2.2.10.1. Curve 2 is an optimum with respect to frequency. Curve 3 requires a shift of the tanδ minimum towards higher frequencies, see section 2.2.10.2. The absolute value of Q at various operating frequencies can be obtained from the curve with an accuracy of about ±15%. To measure the Q directly at the frequency at which the coil is going to be operated it is necessary to complete the test-circuit capacitor (5000 pF) to the required capacitance C_M', with which the coil will be operating and which is normally known; the measured Q must then be multiplied by the factor

$$K = \left(\frac{C_M' \ [pF]}{5000 \ pF} \right)$$

2.2.10.5 Design of a Coil with an Operating Frequency Above the LRT Test Frequency

Connect a capacitor C_{series} as quoted in the table below in series with the test-circuit capacitor in order to reduce the test-circuit capacitance. Connect the test item L_x and C_{series} in series and the free end of the coil to the knurled terminal 14 , that of the capacitor to the earth terminal. The Q readings must then be multiplied be the following factors:

C_{series} [pF]	$C_{test\ circ.}$ [pF]	k ($Q_{true} = Q_{read} \cdot k$)	Frequency
0	5000	1	f_{LRT}
5000	2500	2	$f_1 = f_{LRT}$ 1.41
2000	1430	3,5	$f_2 = f_{LRT}$ 1.87
1000	833	6	$f_3 = f_{LRT}$ 2.45

To measure the Q at a given frequency first determine the capacitance to be connected in series with L_x. $C_{test\ circ.}$ corresponds to the capacitance with which the coil is going to be connected in operation.

$$C_{series} = \frac{5000\ pF \times C_{test\ circ.}\ [pF]}{5000\ pF - C_{test\ circ.}\ [pF]}$$

The measured Q must then be multiplied by the factor

$$K = \left(\frac{5000}{C_{series}} + 1\right).$$

Similarly to section 2.2.10.4, the curves obtained by the measurement show which way the Q maximum must be shifted towards the operating frequency.

3. Maintenance and Repair

3.1 Maintenance

3.1.1 Storage

The LRT tolerates storage temperatures from -20° to +70°C. The natural aging of the capacitors and wiring insulations, however, increases considerably with increasing temperature. High relative humidity speeds up corrosion and may impair the accuracy of the L and Q adjustments (variation of the self-capacitance and Q of the oscillator coil). Care should be taken to avoid condensation of water caused by a rapid change from low to high ambient temperature.

3.1.2 Performance Check

As mentioned in section 1.1, the mechanical and electrical design of the set is such that readjustments will not normally be necessary after years of operation. Should it nevertheless be desirable to check the data and tolerances specified in section 1.2, the following measurements should be carried out at an ambient temperature of 20 to 25°C and normal relative humidity.

3.1.2.1 L Calibration Throughout the Frequency Range

The inductance measurement with the LRT is based on the measurement of the resonant frequency of the circuit formed by the test item L_x and test-circuit capacitor.

3.1.2.1.1 Frequency Calibration of the Oscillator

Remove the screws 1 , 5 , 8 and 15 and withdraw the chassis from its cabinet. Check the frequencies 220 kHz, 200 kHz, 170 kHz, 140 kHz, 120 kHz, 90 kHz, 70 kHz (trimming points of factory adjustment) in the range 100 to 1000 µH. If the rated frequencies are maintained to within ±0.4% the inductance of coil L4, capacitance of trimmer C16 and capacitance variation of the oscillator variable capacitor are correct. In the other ranges only the limit frequencies need be measured to make sure that the trimmers C13 to C20 and the inductances of the oscillator coils have not changed.

A frequency meter with an input impedance of 100 kΩ can be directly connected to the collector of T1 (point 13) of the circuit board 6100-6.5 for the lower ranges. The circuit board is fixed to the range selector S1. In the three higher frequency ranges the measurement must be taken between the coupling capacitor C25 and the common point of capacitors C27 to C31. Otherwise the input capacitance of the frequency meter might slightly change the osillator frequency.

3.1.2.1.2 Checking the Test-circuit Capacitance

Set switch S2 to Q = 100. Take the measurement at f = 10 kHz using a capacitance bridge connected between Bu1 and Bu2. Since the meter amplifier must be inserted and the set switched on, the voltage at the test item should not exceed 80 mV. This corresponds to full-scale deflection of the meter in the Q-MEAS. position of switch S3.
The rated value of the test-circuit capacitance is 5000 pF ±5 pF.

3.1.2.1.3 Checking the Self-capacitance

Use the same test arrangement as for 3.1.2.1.2 but set switch S2 to SELF-C. The rated value of the test-circuit self-capacitance is 30 pF ±0.3 pF.

3.1.2.2 L Calibration with L Standards

L standards can be used to check the accuracy of the set. Check the range limits and two points within each range. Prior to this check, measure the self-capacitance of the L standard with the LRT to find out whether a correction according to 2.2.3.1 is necessary. If the standards have been made for the special purpose and adjusted by means of an AF bridge, check in any case which equivalent circuit of the standard has been measured, what is its Q at the bridge test frequency and whether the inductance of the series equivalent circuit must be converted into the inductance of the parallel equivalent circuit.

3.1.2.3 Q Calibration

As described in section 1.4, the accuracy of the Q reading depends on the magnitude and stability of the oscillator voltage, the accuracy of the capacitive voltage divider and the meter amplifier. Unless Q standards are available it is therefore necessary to check and enter into a record the voltages of the individual functional groups which are in given relations with one another.

[illegible] Checking the Oscillator Voltage Amplitude

Check the oscillator voltage V_{CH} [illegible] by means of a valve voltmeter with probe (accuracy ±3%, $C_{in} \leq$ [illegible] pF, $R_{in} \geq$ [illegible] R&S Electronic Multimeter Type URI) connected to point [illegible] oscillator board [illegible]-6.5. Enter this point, which is [illegible] the calibration of the set, into the test report.

Measure the highest and the lowest oscillator voltage [illegible] and check for a tolerance of ±[illegible] referred to the rating [illegible]

3.1.2.3.2 Checking the Test-circuit Exciting Voltage

Use a selective microvoltmeter of $C_{in} \leq$ 50 pF, $R_{in} \geq$ [illegible] R&S Type [illegible]. C_{in} is the sum of the voltmeter input [illegible] and test-cable capacitance.

Take the measurement at 400 kHz between Bu1 and Bu2 ([illegible] chassis). Enter the voltages for the four coupling positions of switch S2, i.e. Q = 30, Q = 100, Q = 300, Q = 1000, into [illegible] report. For rated values see the example of a test report.

3.1.2.3.3 Checking the Meter Amplifier

In the SELF-C position of S2 the test-circuit capacitor [illegible] from the test circuit and a signal of 400 kHz can be fed directly from a signal generator of $Z_s \leq 100\ \Omega$ (e.g. R&S Type [illegible]) [illegible] and Bu2 to check the meter amplifier. Determine the [illegible] E_{sup} necessary for the meter amplifier to show a deflection [illegible] scale divisions in the Q-MEAS. position of S3. This corresponds to Q = 100 or Q = 1000. Measure the supply voltage with the [illegible] instrument as used to check the exciting voltages and enter [illegible] into the test report. The rating is 80 mV_{rms} ±3%.

[illegible] to this value which is important for the [illegible] of the set, check the following characteristics of the [illegible] amplifier:

7.1.2.3.3.1 Linearity in C Measurements

Supply voltage E_{sup} / mV_{rms}	Reading	Tolerance
$E_{sup} = 80$	10 div.	±0 div.
$\frac{E_{sup}}{2} = 40$	4.9 div.	±0.2 div.
$\frac{E_{sup}}{4} = 20$	2.5 div.	±0.5 div.

7.1.2.3.3.2 Frequency Response

Select the supply voltage so as to obtain a deflection of 10 scale divisions at 10 kHz. The same supply voltage then gives for

f = 1 kHz 10 div. $\frac{+0}{-2}$ div.

f = 5 MHz 10 div. $\frac{+0}{-2}$ div.

7.1.2.3.3.3 Indication in L Measurements

In the L-MEAS. position of switch S3 the following deflections should be obtained for different settings of potentiometer R55 (knob 12):

R55 fully counterclockwise, lowest sensitivity	R55 fully clockwise, highest sensitivity	Deflection which should be obtainable with the specified supply voltage
Supply voltage [mV]	Supply voltage [mV]	
75 ±30%	4 ±50%	0.3
56.5 ±30%	17.5 ±30%	10

5.1.2.3.3.3 Input Impedance

Solder a 10-MΩ series resistor ahead of the input of the meter amplifier (directly at the multi-point connector) and measure the voltage reduction at the output of the signal generator as against the previous condition without the resistor. The input impedance R_{in} is

$$R_{in} = \frac{R_{series}}{\frac{E_1}{E_2} - 1}$$

Test frequency 1 kHz.

Since only the order of magnitude of the input impedance $R_{in} \geq 20$ MΩ must be determined E_2 can be taken from the meter deflection (full-scale value corresponds to 80 mV) in the Q-MEAS. position with a linear characteristic.

5.1.2.3.4 Test Report for Check of Q Reading

Checked: Inductance Meter Type LRT BN 6100

Instruments used:

Oscillator voltage V_{CE} : Electronic Multimeter Type URI
Test-circuit exciting voltage: Selective Microvoltmeter Type USVK
Supply voltage E_{sup} for meter amplifier: Signal Generator Type SRB

Results:

Test freq. 400 kHz	E_{osc} [V_{rms}]	Coupling Q = 30	$E_{exo.}$ [mV_{rms}] Q = 100	Q = 300	Q = 1000	[illegible]
Rating	2,7	2,53	0,8	0,25	0,08	
Measured						
Measured after adj. of set						

3.1.2.3.5 Evaluation of the Results

If the supply voltage E_{sup} required for full-scale deflection of the meter amplifier is to the various exciting voltages as

31.6 : 1 ● 100 : 1 ● 316 : 1 ● 1000 : 1

then the Q calibration is correct.
The measurement of the oscillator voltage has been included in the test report to facilitate trouble-shooting.

3.1.2.4 Checking the Self-C Measurement

The frequency calibration has been checked according to section 3.1.2.1. No new check is necessary unless the test-circuit self capacitance has been changed by soldering connections (change of shielding). Otherwise check according to 3.1.2.1.3.

3.1.3 Electrical Maintenance

In accordance with the sections of chapter 3.1.2 "Performance Check" the adjustments required to recover the rated values in the individual functional groups are described on the following pages.

It is in any case advisable to check the test setup for any possible sources of error before changing any factory-adjusted value, especially if there is no manifest cause for the erroneous LRT adjustment.

3.1.3.1 Oscillator Frequency Adjustment

The oscillator adjustment is described for the range IV (100 - 1000 µH) since the oscillator variable capacitor C23 of the LRT is factory-adjusted in this range. The upper and lower limit frequencies are

adjusted in the same way for the [illegible] ranges, [illegible] the capacitance characteristic of the variable capacitor may vary.

The frequency calibration according to 3.1.2.1.1 may render the following adjustments necessary:

3.1.3.1.1 Adjusting the Inductance of the Oscillator Coil

Trouble: The percentage error of the readings as against the ratings adjusted on the scale of the oscillator variable capacitor (22[illegible] kHz, 200 kHz, 170 kHz, 140 kHz, 120 kHz, 90 kHz, 70 kHz) is equal at the low and high frequencies of the range.

This suggests that the L of the oscillator coil L4 has changed. The L of the coil can only be adjusted through the frequency range if it is sure that the C characteristic of the oscillator variable capacitor corresponds to the rated values. This is so if the frequency curve of the oscillator is satisfactory at least in one range. Otherwise coil L4 must be removed and adjusted to its rating of 4.9 mH ±0.3%. Measure at 10 kHz between contacts 1 and [illegible], for example, the LC Precision Bridge Type LCB.

3.1.3.1.2 Adjusting Trimmers C19 to C20

Trouble: The values measured at the low frequencies agree fairly well with the ratings but the percentage error increases towards the higher frequencies of the range.

This trouble results if the capacitance of trimmer C19 [illegible] or if the self-capacitance of the oscillator coil, which is in parallel with the trimmer, has changed. At low frequencies the effect of such variations is smaller since the total capacitance of the variable capacitor, approx. 1000 pF, is in parallel with coil L4 [illegible] percentage error resulting from the variation of a few pico-F is smaller than in the high frequency range, where the capacitance of

the variable capacitor is as low as 40 pF. Adjust the frequency to the rated value with trimmer C16. (Note that the adjustments of 3.1.3.1.1 and 3.1.3.1.2 are interdependent.)

3.1.3.1.3 Adjusting the Oscillator Variable Capacitor

The percentage error does not follow any law. Then the capacitance characteristic of the oscillator variable capacitor is incorrect. Remove coil L4, which serves as reference for the adjustment of the variable capacitor, check it according to 3.1.3.1.1 using a precision bridge and correct, if necessary. Reset the coil in place, set pointer 4 to 220 kHz and adjust the oscillator frequency to this rating ±0.1% using trimmer C16. Adjust the other frequencies of the range successively, starting at the high values, by bending the fringe plates of the variable capacitor. Using tweezers, bend those rotor plates which just enter into the stator at the frequency adjusted for. The frequency increases if the distance between the stator and rotor plate is increased, since this corresponds to a decrease of the capacitance of the variable capacitor. If the distance of the capacitor plates is decreased the oscillator frequency becomes lower. After this adjustment check the limit frequencies of all other measurement ranges.

3.1.3.2 Adjusting the Test Circuit

3.1.3.2.1 Adjusting the Test-circuit Capacitance

If the check according to 3.1.2.1.2 shows an error greater than ±0.3% for the test-circuit capacitance, try to find the cause, e.g. a loose wire in the test-circuit wiring. After soldering at the capacitors C34, C35, C36, wait until the components are at their normal operating temperature before taking a measurement.

The rated test-circuit capacitance of 5000 pF ±2 pF can then be adjusted with trimmer C35.

3.1.3.2.2 Adjusting the Test-circuit Self-capacitance

Any departures measured according to 3.1.2.1.3 can be corrected for by means of trimmer C33.

3.1.3.2.3 Adjusting the Test-circuit Wiring Inductance

The wiring inductance of the test circuit is represented by L1 in the circuit diagram. It results from the wiring of point 20 of the printed board 6100-1.10 via switch S2IR to socket 1 (knurled terminal 4). A 0.1-µH standard is needed for checking and adjusting: bend the connection from point 20 to S2IR2 so as to obtain maximum meter deflection with the 0.1-µH standard inserted.

3.1.3.3 Q Calibration

For the correction of the Q calibration according to 3.1.2.3 proceed as follows:
Since the Q measurement, as already mentioned, depends on the accuracy of the voltage relation between the oscillator, output control and meter amplifier, all measured values should be checked after adjustments have been made to a functional group and be entered into the line "Measured after adj. of set" of the test report 3.1.2.3.4.

3.1.3.3.1 Adjusting the Oscillator Voltage Amplitude

If the oscillator voltage, measured according to 3.1.2.3.1, considerably exceeds the permissible tolerance in one frequency range but complies with the rating in the other ranges, check the shunt resistance of the range concerned. Resistors R17, R18, R19, R20, R56 are directly connected at the soldering lugs of the oscillator coils. The corresponding numbers of the soldering lugs are given in the circuit diagram. If the cause of the trouble cannot be found in a defective or disconnected resistor or partial short-circuit of a winding due, say, to bending of wires, refer to the repair instructions.

If the oscillator voltage is too high or too low in all ranges, it is likely that the characteristics of transistor T1 or T2 have changed. Adjust the oscillator voltage to its rated value at 400 kHz using potentiometer R6. If the voltage at R9 found by checking the operating point of T1 differs more than ±20% from the rating given in the circuit diagram, replace the two transistors T1 and T2 by the same types, adjust the AC voltage amplitude to its rating of 2.7 V ±3% and check the operating point of T1.

Soldering on printed circuits requires extreme care and special tools. The temperature of the soldering iron tip must not be too high. The liquid soldering tin must be removed from the board by means of a special pump. Then the bent contact wire of the circuit component can be straightened and pulled upwards. Do not apply force to avoid damage of the component and of the board.

Next measure the highest and the lowest oscillator voltage for each range and check for a tolerance of ±8% of the rating.

If during this check the oscillation fully stops for a short time in a particular range while the frequency is tuned through, check whether the same occurs in another range at the same position of the variable capacitor. The cause is in this case usually contamination of a variable capacitor. A drop of soldering tin, a short end of wire or even dust usually produces a short-circuit between the stator and rotor plates only in one particular position of the variable capacitor and causes the oscillation to stop. Remove the contamination with a bristle brush but do not touch the capacitor plates with the shaft. Do not use compressed air since a strong jet of air may bend the plates and thus invalidate the calibration.

3.1.3.3.2 Adjusting the Test-circuit Exciting Voltage

If the oscillator voltage amplitude has been adjusted to its rated value and if the exciting voltages are too high or too low by a given

percentage for all positions of the coupling capacitors, correct by means of the coupling capacitor C25 between the oscillator and test circuit. Rated value of coupling voltage E_1 measured between C25 and C26 to C31 to earth: 315 mV ±3% (use the same measuring instrument as under 3.1.2.3.2). Trimmer C25 is between switch S1 and the oscillator coil L1.

If the exciting voltage is in error for one Q range or if several ranges present different errors, adjust the exciting voltages for their respective ratings by means of the corresponding couplers.

Position of switch 12	Q = 30	Q = 100	Q = 300	Q = 1000
Coupler	C30, C31	C29	C28	C27
Rated exciting voltage [mV]	2.53	0.8	0.25	0.08

The coupling capacitors are mounted to an angle piece screwed to switch S2.

3.1.3.3.3 Adjusting the Meter Amplifier

If the supply voltage required for a meter deflection of 10 scale divisions (measured according to 3.1.2.3.3) does not deviate more than ±10% from the rating, the overall gain of the meter amplifier can be adjusted with potentiometer R45. With the meter amplifier plugged in, the potentiometer is accessible from above with a screwdriver through a hole at the side of the oscillator coils.

Wider deviations from the rating suggest a basic defect in the meter amplifier. The cause may be a strong decrease in gain of a transistor or a defective rectifier diode in the indicator section.

If, however, the values measured according to 3.1.2.3.3.2 present very large errors, the wiring, a coupling capacitor, or a tantalum electrolytic capacitor by-passing the negative DC feedback may be defective. In this case check according to chapter 3.4.4 and repair, if necessary, before adjusting the operating points of the transistors of the meter amplifier or replacing diodes and transistors. The location of the circuit components and connections of the circuit board can be seen on drawing 6100 - 5 Bl. 2. Remove board 6100 - 5 by pulling upwards. To check the operating points of the transistors lay the cicuit board on the table and apply a DC voltage of 18 V ±2% to capacitor C53. If the measured operating point of any stage does not agree with the rating given in the circuit diagram, replace the transistor concerned by the same type, readjust the operating point and adjust the overall gain of the meter amplifier put back in place using potentiometer R45. This procedure must also correct for any errors found according to 3.1.2.3.3.1.

If no error is found by checking the transistors, check the performance of diodes G1 7 to G1 10.

3.1.3.3.3.1 Adjusting the Zero Suppression for the L-MEAS. Position of the Meter Amplifier

If the performance of the meter amplifier is correct in the Q-MEAS. position whereas the required sensitivity is not attained with switch 16 at L-MEAS. , either the gain of transistor T8 has dropped or diode G1 12 is defective.

If the supply voltages required for the meter deflections of 0.5 and 10 scale divisions (see 3.1.2.3.3.3. Indication in L Measurements) are too large by the same amount, it is very likely that the transistor is defective. If, however, the voltage required for 0.5 division corresponds approximately to the rating whereas full-scale deflection requires too high a supply voltage, the diode limiting starts too early and the diode must be replaced.

3.1.3.3.3.2 Adjusting the Input Impedance

If the input impedance, measured according to 3.1.2.3.3.4, has dropped below the specified value, replace the field-effect transistor T5. Then adjust the operating point and check the test-circuit self-capacitance according to 3.1.2.1.2.

3.1.4 Mechanical Maintenance

The drive of the variable capacitor, carriage guide of the pointer and the two cord drives are lubricated at the factory with a non-resinous grease and do not normally require maintenance.

3.2 Circuit Description

The LRT consists of the following functional groups (see block diagram, Fig. 1):
Variable-frequency oscillator with AGC, coupling capacitor, test circuit, meter amplifier with rectifier and zero suppression, and regulated power supply.

3.2.1 Oscillator

The LRT test frequency is subdivided into 7 ranges. The oscillator coils L1 to L7 are switched by S1, selecting the ranges of 1 µH to 1 H. The variable capacitor C23 permits variation of the frequency within a range. The function of the individual components and windings of an oscillator coil is here described for range 7 (0.1 H to 1 H, coil L7); it is similar for the other coils.

The oscillator frequency is determined by the inductance of coil L7 1 to 4 (point 1 is taken to chassis) and the parallel arrangement of C41, trimmer C13 and variable capacitor C23. The capacitance characteristic of the variable capacitor being predetermined, the lower limit frequency of a range is trimmed by adjusting the inductance of the oscillator coil L7 by means of its tuning slug. The upper rated

frequency is calibrated by means of trimmer C13 in parallel with the small capacitor C41. Resistor R17 in parallel with the oscillator winding permits absolute adjustment of the amplitude and improvement of its frequency response.
The collector winding (contacts 5 and 7) is decoupled from the frequency-determining oscillator winding for optimum frequency stability.

A DC voltage is produced by means of the AGC winding (contact 3) via diode G1 4. Together with transistor T2 which forms the emitter resistance of T1 it serves for the AGC of the oscillator. If the oscillator voltage increases beyond its rating, the voltage of the AGC winding and, as a result, the voltage rectified by diode G1 4 also increase. Transistor T2 is thus blocked, the quiescent current of T1 decreases, causing the gain and oscillator output voltage also to decrease.

Capacitor C1 by-passes the emitter resistance of T1. It must be switched for each range since phase swinging occurs if the time constant of C1 and the emitter resistance exceed a given limit.

3.2.2 Coupling and Division of the Oscillator Voltage

The voltage exciting the test circuit is derived at the collector winding. The capacitive divider formed by C25 and the sum of the coupling capacitors C27 to C31 reduces the collector voltage of about 2.7 V to 0.315 V. The voltage between C25 and the common point of capacitors C27 to C31 is constant and independent of the position of S2 since the coupling capacitors that are not cut into circuit are taken to chassis via the switch and the capacitor cut in is also at chassis potenial via the test-circuit capacitor. Another capacitive division takes place between the coupling capacitor cut in and the test-circuit capacitor; this division ratio (i.e. the value of the coupling capacitor) determines the exciting voltage and thus the preselected Q range.

3.2.3 Test Circuit

The test circuit proper consists of the test item L_x, in series with the wiring inductance L8, and the test-circuit capacitance which is composed of C34, C35, C36 in parallel and the test-circuit self-capacitance (wiring capacitance + amplifier input capacitance).

3.2.4 Meter Amplifier

The meter amplifier consists of the input stage, amplifier and indicator section with rectifier and zero suppression for the L measurement. The first stage, a field-effect transistor connected as a source follower, increases the input impedance to about 25 MΩ. The 2-stage amplifier which follows increases the voltage of about 80 mV_{rms} (max. voltage at the test circuit) to about 3,6 V_{rms}, which corresponds to a gain of about 33 dB. Capacitor C51 in series with R43 slightly reduces the negative feedback at the upper frequency limit and thus counteracts the drop in gain.

The amplifier output voltage is multiplied by four by the rectification in the indicator section. This voltage can be directly indicated on meter J1 via R54 (switch S3 at Q-MEAS.).

For L measurements, the zero suppression is varied by means of C9 depending on the position of potentiometer R55, the sensitivity remaining approximately constant irrespective of the suppression.

Diode G1 12 protects the meter when measurements are carried out with zero suppression. Resistor R57 is necessary because the diode is for a short time between +18 V and 0 V during switchover from L-MEAS. to Q-MEAS.

3.2.5 Power Supply

The power supply is made from a power transformer followed by a bridge-type rectifier. After filtering, the DC voltage is stabilized at 18 V with a Zener diode.

3.3 Mechanical Construction

In accordance with the electrical groups, the LRT is made up of mechanical subassemblies.

a) Front panel with test circuit.

b) Switching mechanism, dial drum and pointer drive form a compact unit. The meter amplifier is fixed to this unit. [illegible] position and can be replaced without soldering.

c) A subpanel carries the oscillator coils, variable capacitor and range selector with the oscillator circuit board.

d) The tray fixed at the rear of the instrument carries the power supply. After loosening of the fixing screws it is [illegible] set only by the cable harness and can be swung out [illegible] access to the oscillator.

3.4 Repair

This chapter deals with the defects that cannot be eliminated by the readjustment of a component or replacement of diodes and transistors. Any component or any branch of wiring may be the cause of the disturbance or failure of the set. In most cases the cause will lie in a component that is subject to wear, liable to mechanical damage or subject to aging. The following instructions are therefore confined to such components, the troubles they may cause and the corresponding remedy.

3.4.1 Repair of the Power Supply

If the pilot lamp 7 fails to light and the lamp itself is intact, check fuse Si1 (see section 2.1.2). If the fuse is intact, the power cable or switch S5 is probably defective. These parts cannot be repaired but have to be replaced. If, however, the fuse is blown, there is probably a short-circuit at the secondary side. [illegible] all

leads going to the loads at th[illegible] conn[illegible] dummy load (P_{min} 0.3 W) in pa[illegible] diode. [illegible] fuse and check the voltage across the Zener diode for [illegible] to 19 V using a DC voltmeter. The primary current [illegible] ±20%. If the departures from this value are greater or [illegible] blows again, then the defect lies in the power supply [illegible] complete wiring of this section. If the cause of tr[illegible] found check transformer Tr1, rectifier Gl 1, the filter [illegible] R38, R2 and R4) and the Zener diode Gl 3.

3.4.2 Repair of the Oscillator

3.4.2.1 Repair of the Electrical Components

If no pointer deflection is obtained when tuning to [illegible] the power supply functions satisfactorily, check the [illegible] according to 3.1.3.1 and 3.1.3.3.1. If the oscillator [illegible] or fails to operate and the rated performance cannot [illegible] through the adjustments described in the maintenance [illegible] first check the components most liable to defects in [illegible] range selector S1 with its wiring, variable capacitor [illegible] oscillator coils L1 to L7. If the oscillator functions [illegible] in one or several ranges, the variable capacitor is [illegible] intact. As to the switch, check whether the rotor blades [illegible] middle of the contact tongs for the defective range (the [illegible] contact tongs forms a soldering lug). If not, or if the [illegible] contaminated, measure the resistance with an ohmmeter [illegible] is due to a wrong position of the wiper and contact [illegible] of the contact tongs resulting from axial pressure of [illegible] replace the switch by a new [illegible] return the instrum[illegible] factory for repair. If contaminated contacts are treat[illegible] suitable contact cleaning spray they normally operate [illegible] for some time. However, if the contact material has been [illegible] corrosive atmosphere, the switch should be replaced. If [illegible] been found in the switch, check the wires and soldered [illegible]

corresponding range by visual inspection and slight pulling with tweezers. Before doing any soldering to the ferrite ring of the coil be sure to draw the power plug.

If the instrument has suffered a heavy shock, say, by falling from the table, the ferrite core of a coil may be broken. In most cases this can be seen when the holder is unscrewed. Remove the broken coil and replace the core. Before reinsertion, adjust the coil with the aid of a bridge or another LRT. After the coil has been inserted adjust the frequency range limits according to 3.1.3.1.

The replacement of transistors T1 and T2 and cleaning of the variable capacitor C23 are described in 3.1.3.3.1. The other elements of the circuit board 6100 - 6.5 will not normally cause any trouble.

3.4.2.2 Repair of the Mechanical Components

If the dial drum does not move when the range selector is switched or pointer A does not respond to the tuning knob, the cause may lie in a loose knob, slipping clutch or a defective drive cord. The knob and clutch can be fixed to their shafts by tightening the grub screws. Make sure that the range indication agrees with the position of switch S1.

This is also necessary when the drive cord for the dial drum is replaced. Be sure to use a drive cord ZAL 19 x 0.1, approx. [illegible] for the tuning pointer, which is available from [illegible]. Any backlash in the drive or slipping of the rope directly [illegible] sion of the instrument. To adjust the pointer, loosen [illegible] clutch which connects the pointer drive and the variable capacitor. Turn the pointer to the right-hand stop and set the variable capacitor in full mesh. Then tighten the screw fixing the clutch on the shaft. Check the limit frequencies according to 3.1.2.1.1 in the range of 100 to 1000 kHz. If the correct values are not obtained, correct it in the mechanical adjustment of the variable capacitor relative to the frequency indication.

3.4.3 Repair of the Test Circuit

The components of the test circuit, air trimmers of the coupler and styroflex capacitors are not liable to defects. Therefore, before checking the test circuit, check the amplifier performance by means of a signal fed in from a signal generator. If the meter amplifier functions satisfactorily the defect is in the test-circuit wiring or in switch S2. For repair refer to 3.4.2.1.

3.4.4 Repair of the Meter Amplifier

The replacement of the transistors of the meter amplifier and check of the rectifier diodes are described in 3.1.3.3.3 and 3.1.3.3.3.1. If the rated performance is not obtained, check the wiring of the complete group and switch S3.

If no defect is found remove the circuit board 6100 - 5 by pulling upward and feed a DC supply voltage to capacitor C53 as described in 3.1.3.3.3. Feed a test voltage of 80 mV, f = 10 kHz to resistor R26. The resulting AC voltage at capacitor C54 must be 3.6 V_{rms} ±20% and a DC voltage of 15 V ±20% must appear at contact 8 of Bu3. If the voltage at C54 is much too low or no signal at all is measurable, the defect can be located by measurements at the coupling capacitors C46 and C49. Otherwise, i.e. if the voltage at C54 corresponds to its rating, check the rectifier again. If a defective component is replaced in the meter amplifier, note what has been said in 3.1.3.3.1 about soldering on the circuit board.

Translations for Figs. 1 - 12

Bild 1	Fig. 1
Blockschaltbild	Block diagram
Anzeige Instrument	Meter
einstellbare Nullpunkt-Unterdrückung	Adjustable zero suppression
geregelt	Stabilized
Gleichrichter	Rectifier
Koppler	Coupling capacitor
LC-Generator	LC oscillator
L-Messung	L meas.
Meßkreis	Test circuit
Meßverstärker	Meter amplifier
Netzteil	Power supply
Q-Messung lin. Anzeige	Q meas. lin. indication

Bild 2	Fig. 2
Bedienungsorgane an der Frontplatte	Front panel controls

Bild 3	Fig. 3
Diagramm zur Korrektur der L-Werte von Spulen mit großer Wicklungskapazität	Diagram for the correction of L of coils of high winding capacitance
Bereich(e)	Range(s)
Eigenkapazität C_0 der Spule	Self-capacitance C_0 of the coil
Korrekturfaktor	Correction factor

Bild 4	Fig. 4
Ersatzschaltbild eines Übertragers	Equivalent circuit of a transformer

Bild 5

Nomogramm zur Ermittlung der Eigenkapazität von Spulen

Meßbeispiel

Resonanzfrequenz mit abgeschaltetem Meßkreiskondensator gemessen
Schalter S2 auf Stellung "Spulen-C-Messung"

Resonanzfrequenz mit eingeschaltetem Meßkreiskondensator gemessen
Schalter S2 auf L-Messung

Fig. 5

Nomograph for the determination of the self-capacitance of coils

Example

Resonance frequency measured with test-circuit capacitor cut off
Switch S2 at SELF-C

Resonance frequency measured with test-circuit capacitor cut in

Switch S2 at L-MEAS.

Bild 6

Korrektur der Gütemessung bei großen Induktivitätswerten

Angezeigter Gütewert

Anzeige-Abweichung bedingt durch:

a) den endlichen Eingangswiderstand des Anzeigeverstärkers, welcher bei hohen Resonanzwiderständen eine zusätzliche Meßkreisbedämpfung verursacht

b) die Verluste des Meßkreiskondensators

Tatsächlicher Gütewert des Meßobjektes

Fig. 6

Correction of Q measurement with high inductances

Indicated Q

Departure of indication due to:

a) the finite input impedance of the meter amplifier causing additional damping of the test circuit at high resonant impedances

b) the losses of the test-circuit capacitor

True Q of test item

Bild 7

Korrektur der Gütemessung bei kleinen Induktivitätswerten

Angezeigter Gütewert

Anzeige - Abweichung bedingt durch die geringe Güte der Eigeninduktivität des Meßkreises und durch die Verluste des Meßkreiskondensators

Fig. 7

Correction of Q measurement with low inductances

Indicated Q

Departure of indication due to the low Q of the test-circuit self-inductance and to the losses of the test-circuit capacitor

(Die gestrichelten Kurven deuten die starke Verschlechterung des Meßkreises für sehr kleine Induktivitäten an; sie sind für eine Korrektur nur bedingt verwendbar.)

(The dashed curves indicate the pronounced deterioration of the test circuit for very small inductances; only conditionally usable for correction.)

Tatsächlicher Gütewert des Meßobjekts

True Q of test item

Bild 8

Fig. 8

Obere Meßbereichsgrenze für Eigenkapazitäten, abhängig von der Spulengüte

Upper range limit for self-capacitances as a function of coil Q

Eigenkapazität C_e der Spule

Self-capacitance C_e of the coil

Güte der Spule

Coil Q

Bild 9

Fig. 9

Untere Meßbereichsgrenze für Eigenkapazitäten, abhängig vom L-Wert der Spule

Lower range limit for self-capacitances as a function of coil L

Eigenkapazität der Spule

Self-capacitance of the coil

Induktivität der Spule

Coil inductance

Bild 10

Fig. 10

Kurven zur Dimensionierung einer Spule mit maximaler Güte

Curves for the design of coils of maximum Q

Betrieb

Operation

Der Verlustfaktor tan δ in Abhängigkeit von der Frequenz

Dissipation factor tan δ as a function of frequency

Die Abbildungen 10a...10d zeigen den prinzipiellen Kurvenverlauf in relativen Maßstäben

Figs. 10a to 10d show the curve shapes at relative scales

Q-Kurven in Abhängigkeiten von der Frequenz	Q as a function of frequency
Verlauf des gesamten Verlustwiderstandes bezogen auf die Induktivität L der gemessenen Spule in Abhängigkeit von der Frequenz	Total loss resistance referred to the measured coil L, as a function of frequency
Verlauf des Kupfer- sowie des Eisenverlustwiderstandes in Abhängigkeit von der Frequenz	Copper and iron loss resistance as a function of frequency

Bild 11

Vorrichtung zum Messen von Induktivitäten unter 100 nH. Links ohne, rechts mit Meßobjekt

Fig. 11

Measuring device for inductances of less than 100 nH. left: without test item,; right: with test item

Bild 12

Maßskizzen der Meßvorrichtung

Abstandsstück

Cu-Kaschierung

Cu-Kaschierung aufgeschlitzt

Leiter
Cu-Blech

Scheibe
Ultramid-L oder Hartgewebe

Steckerplatte
einseitig kaschiertes
Glashartgewebe, 2,5 dick

Stückliste für die Meßvorrichtung:

2 Leiter
1 Scheibe
1 Steckerplatte
2 Abstandsstücke
2 einschraubbare Bananenstecker mit 4-mm-Gewinde

Fig. 12

Dimensional drawing of measuring device

Spacer

Cu plating

Cu plating slotted

Conductor
Cu sheet

Disc
Ultramid-S or hard tissue

Plug plate
Hard glass fabric, copper-plated
2.5 mm thick

Parts list of measuring device:

2 Conductors
1 Disc
1 Plug plate
2 Spacers
2 Screw-in banana plugs with 4-mm thread

Translations for Figs. 1 - 12 (continued)

2 Zahnscheiben 4 DIN 439
2 Muttern M4 DIN 439
2 Buchsen, Fa. Barnes, Typ LBX-01 (oder ähnliche Ausführung, siehe Bulletin Nr. 121 der Fa. Barnes)
2 Zylinderschrauben M 23 x 12 DIN 84

2 Tooth lock washers [illegible] 439
2 Nuts M4 DIN [illegible]
2 Sockets LBX-01 [illegible] by Barnes) or similar model. [illegible] Bulletin No. [illegible] Barnes)
2 Cylinder head screws M 23 x 12 DIN [illegible]

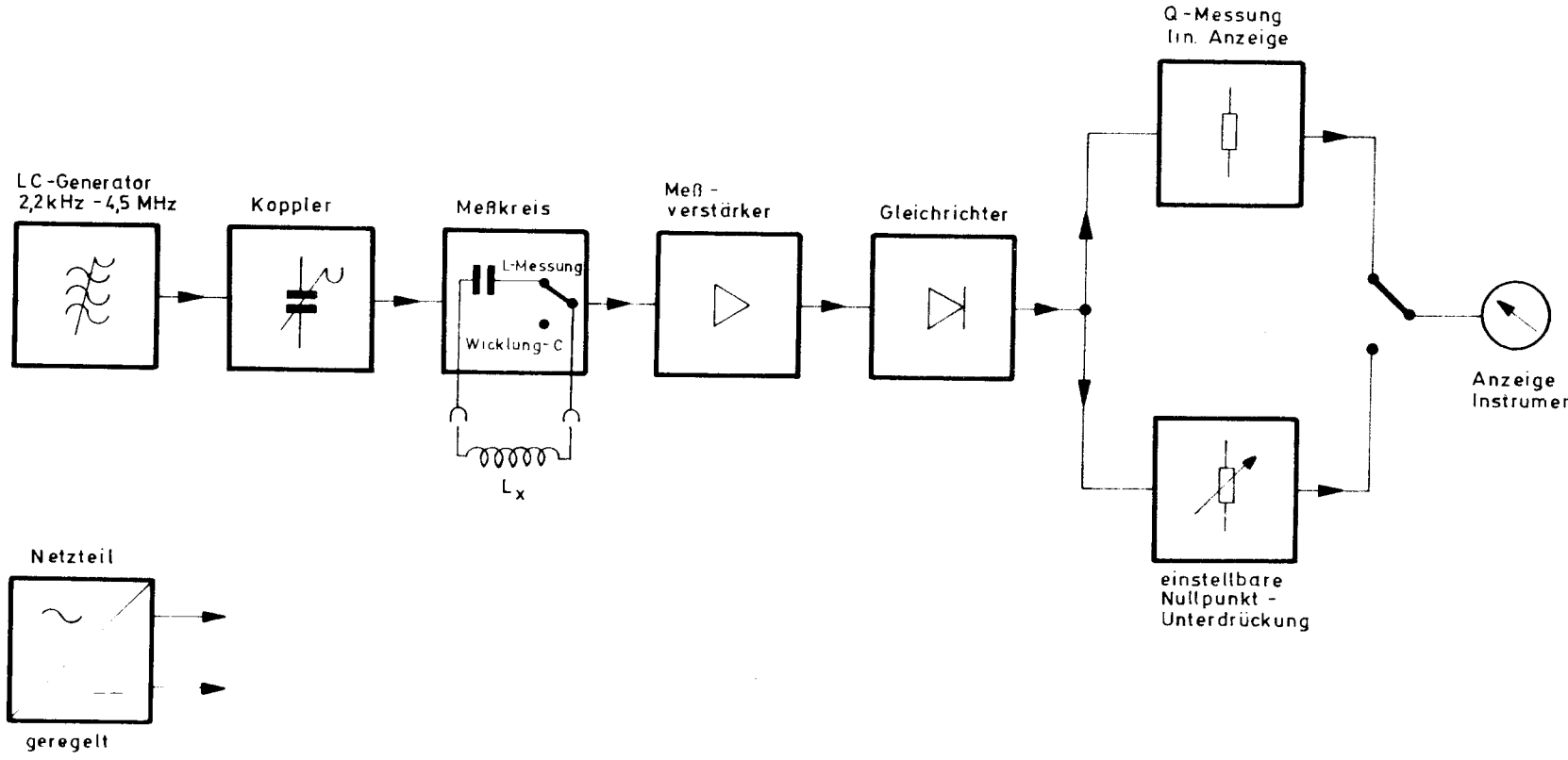
LC-Generator
2,2kHz - 4,5 MHz
Koppler
Meßkreis
L-Messung
Wicklung-C
L_x
Meß-
verstärker
Gleichrichter
Q-Messung
lin. Anzeige
Anzeige
Instrumer
einstellbare
Nullpunkt-
Unterdrückung
Netzteil
geregelt

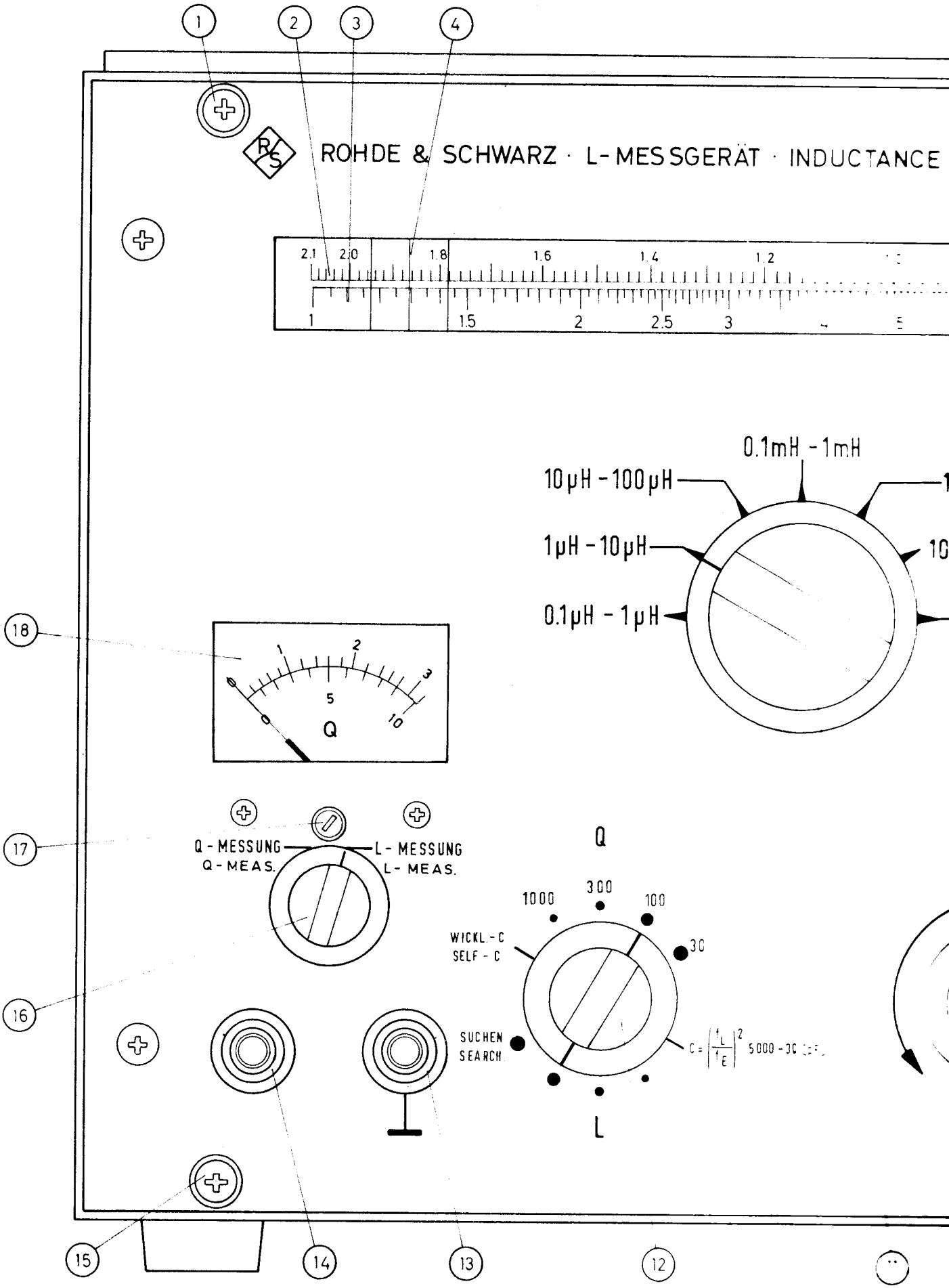
ROHDE & SCHWARZ · L-MESSGERÄT · INDUCTANCE
2.1
2.0
1.8
1.6
1.4
1.2
1
1.5
2
2.5
3
0.1mH - 1mH
10µH - 100µH
1µH - 10µH
0.1µH - 1µH
Q
Q - MESSUNG
Q - MEAS.
L - MESSUNG
L - MEAS.
1000
300
100
30
WICKL. - C
SELF - C
SUCHEN
SEARCH
L
18
17
16
15
14
13
12

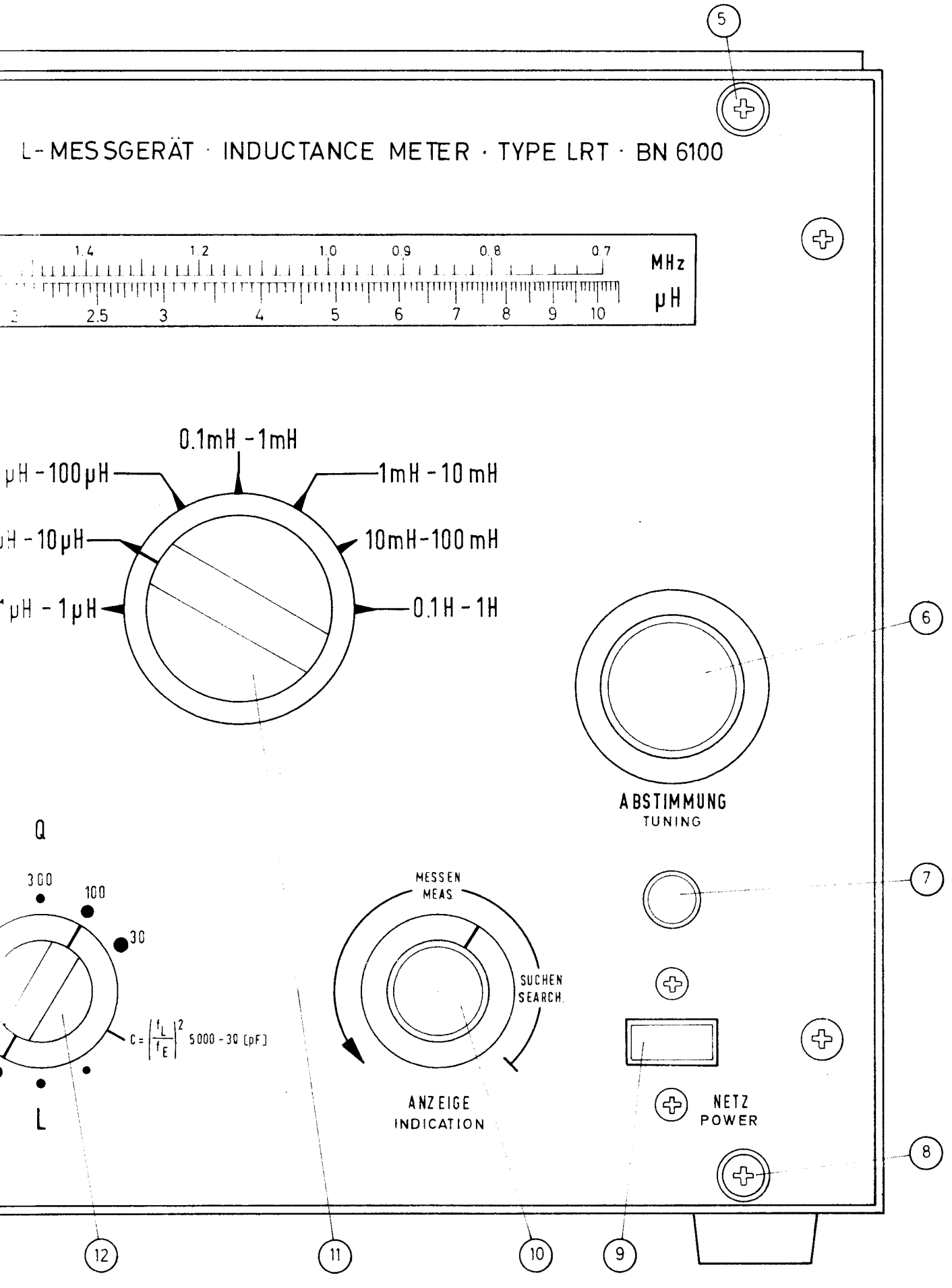

Bedienungsorgane an der Frontplatte

Bild 2.

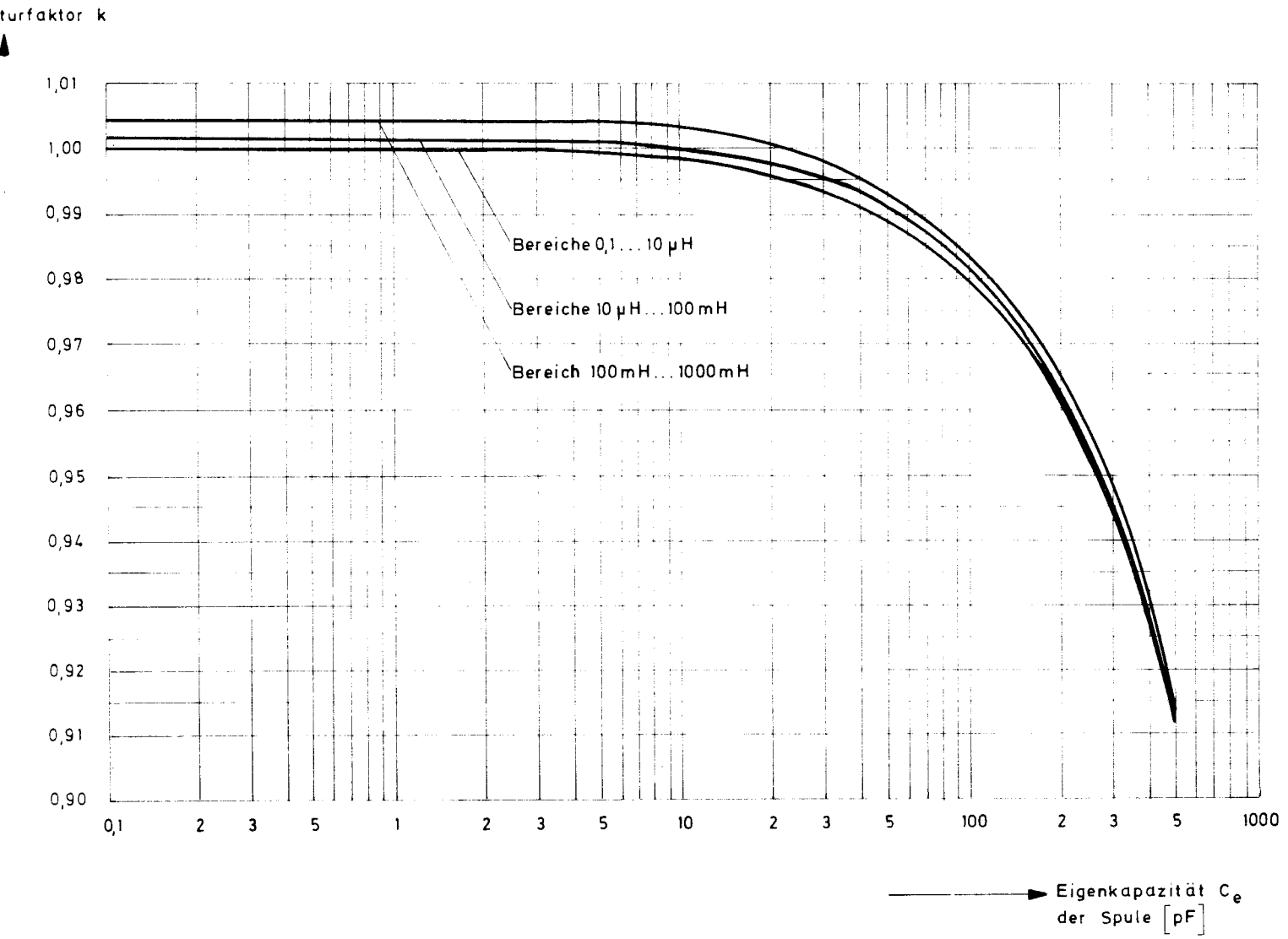

Diagramm zur Korrektur der L-Werte von Spulen mit großer Wicklungskapazität

Bild 3.

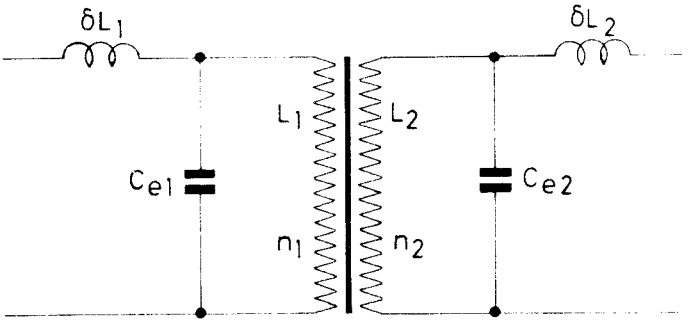

R 16070
B. 55

Ersatzschaltbild eines Übertragers

Bild 4.

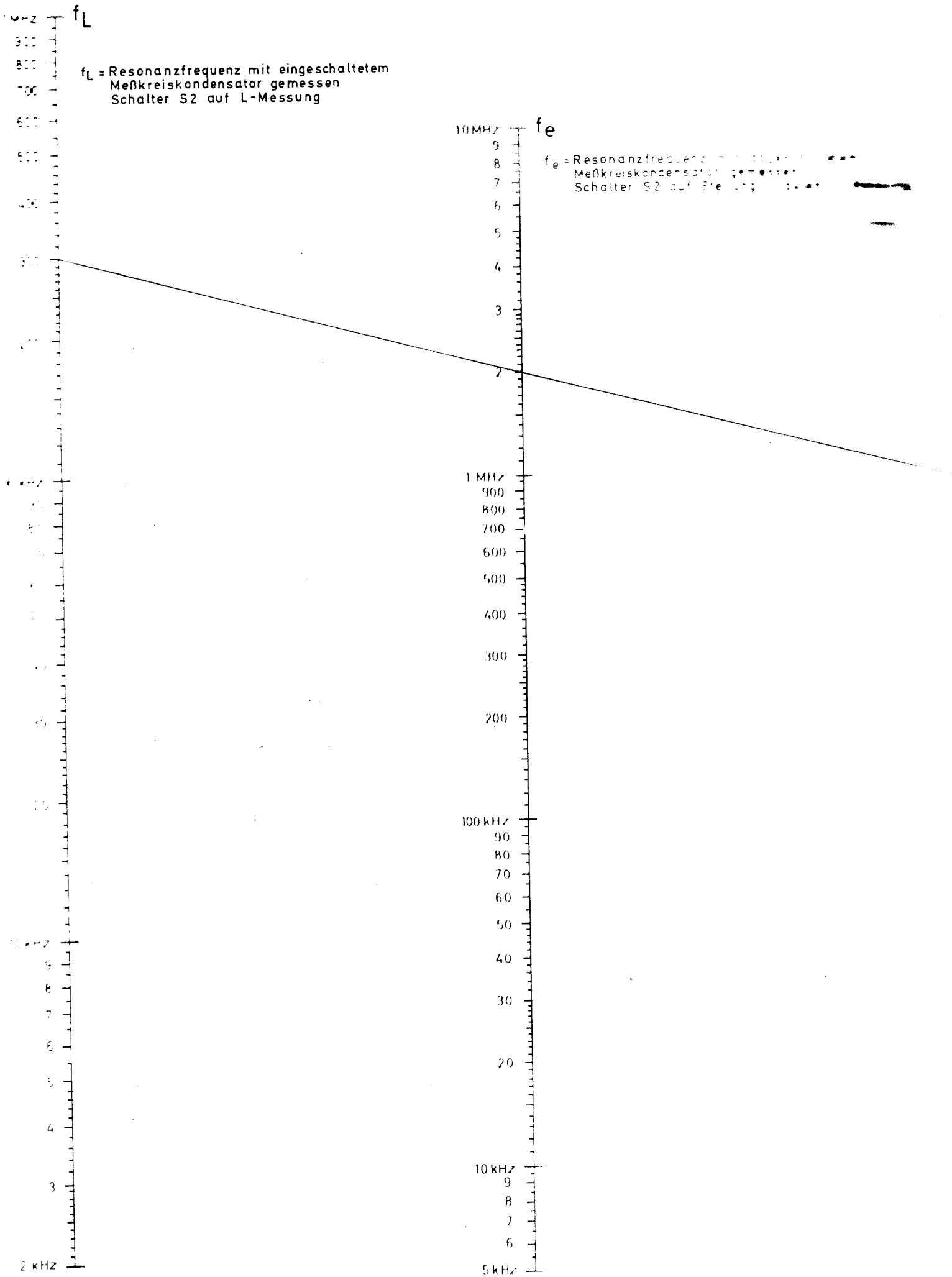
f_L
f_L = Resonanzfrequenz mit eingeschaltetem Meßkreiskondensator gemessen Schalter S2 auf L-Messung
f_e
f_e = Resonanzfrequenz ohne eingeschalteten Meßkreiskondensator gemessen Schalter S2 auf f_e-Messung
10 MHz
9
8
7
6
5
4
3
2
1 MHz
900
800
700
600
500
400
300
200
100 kHz
90
80
70
60
50
40
30
20
10 kHz
9
8
7
6
5 kHz
9
8
7
6
5
4
3
2 kHz

R 16070
Bl. 56

Meßbeispiel:
f_L = 300 kHz
f_e = 2 MHz
C_E = 82,5 pF

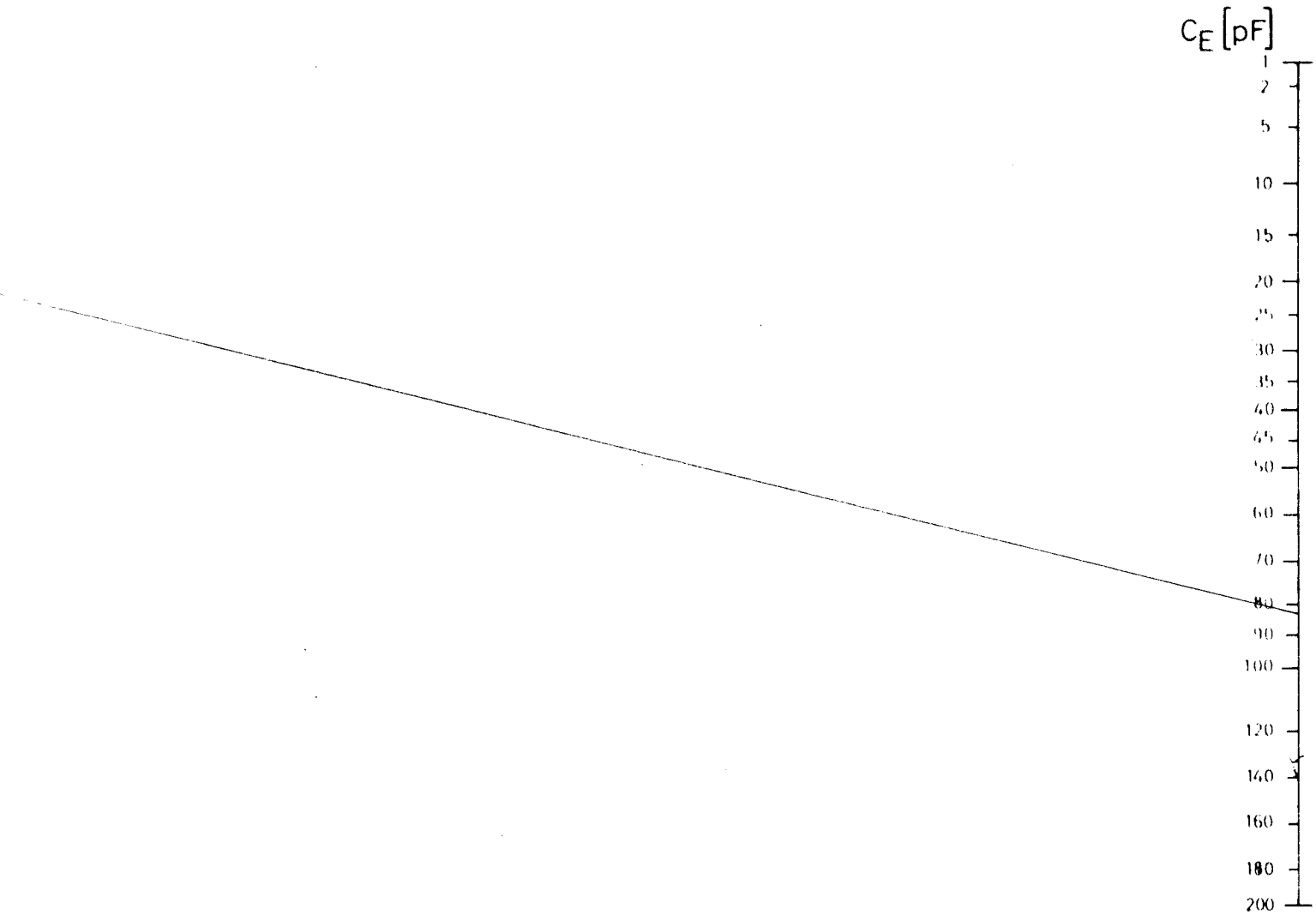

Nomogramm zur Ermittlung der Eigenkapazität von Spulen

Bild 5.

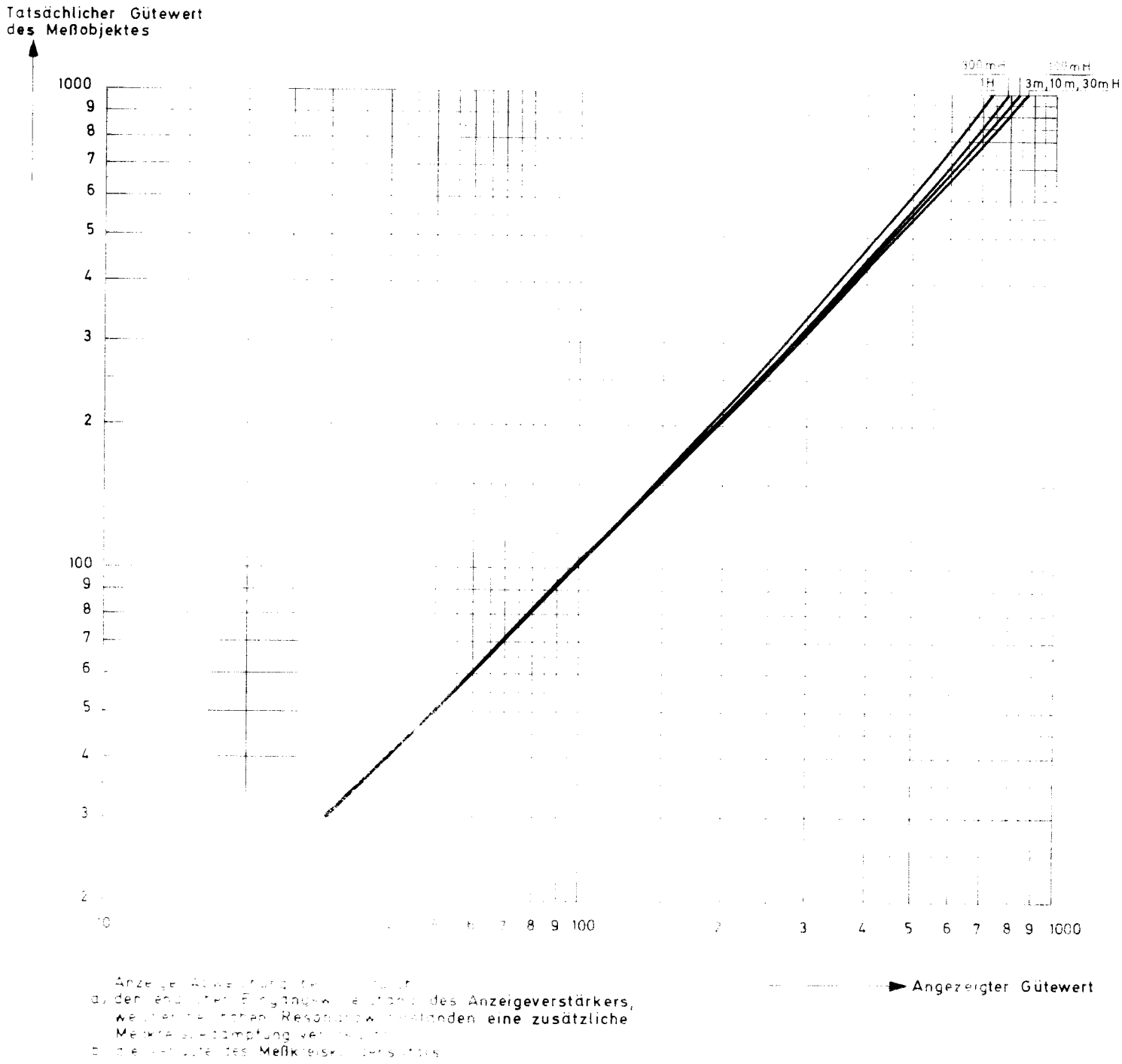

Anzeige[illegible]
a) den [illegible] des Anzeigeverstärkers, [illegible] eine zusätzliche [illegible]
b) [illegible] des Meßkreis[illegible]

[illegible]ektur der Gütemessung be[illegible]
[illegible] Induktivitätswerten

Bild 6.

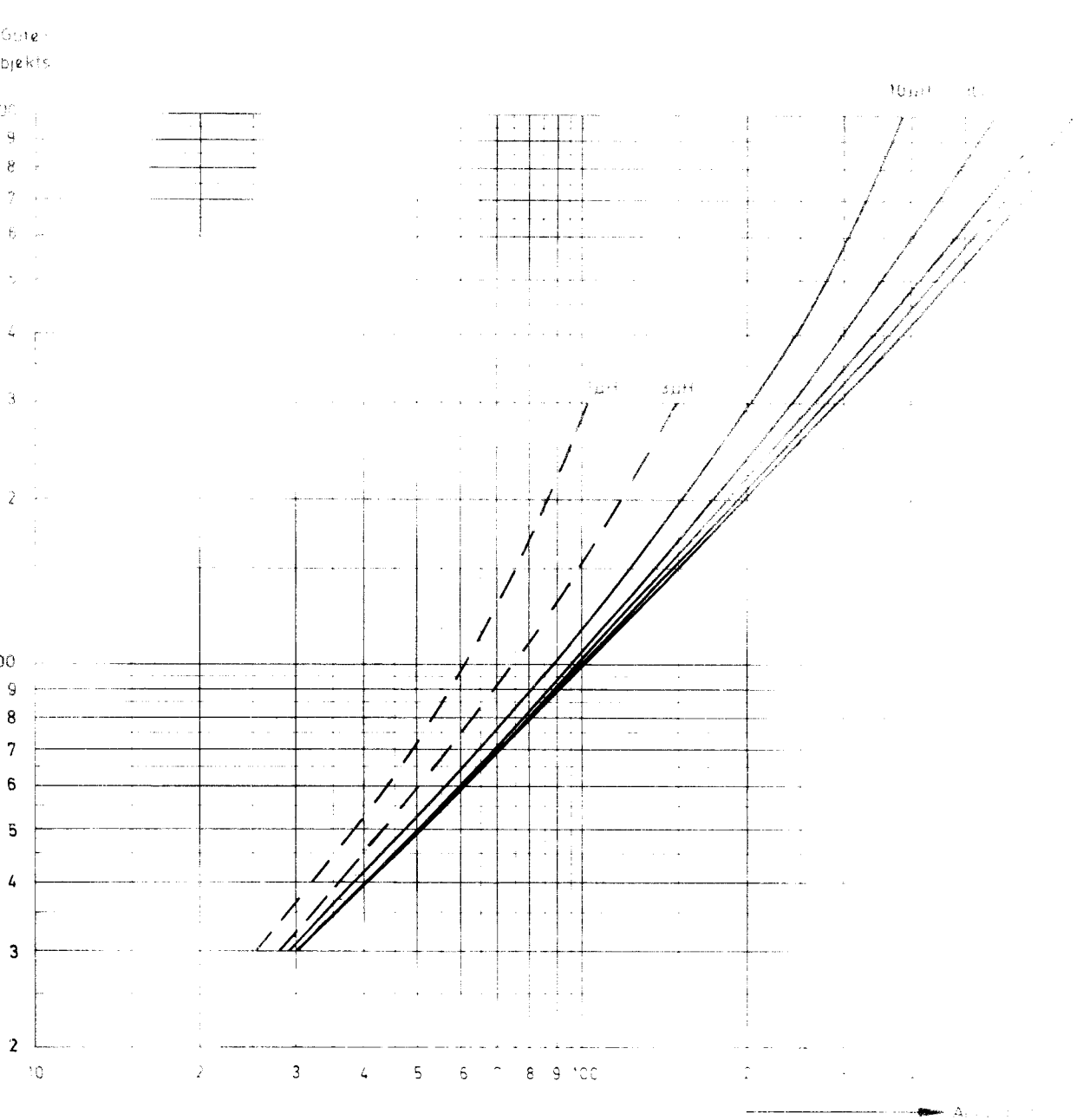

Anzeige Abweichung bedingt durch die geringe Güte der Eigeninduktivität des Meßkreises und durch die Verluste des Meßkreiskondensators
(Die gestrichelten Kurven [illegible] die stärke [illegible] terung des Meßkreises [illegible] an; sie sind für eine [illegible] bedingt verwendbar

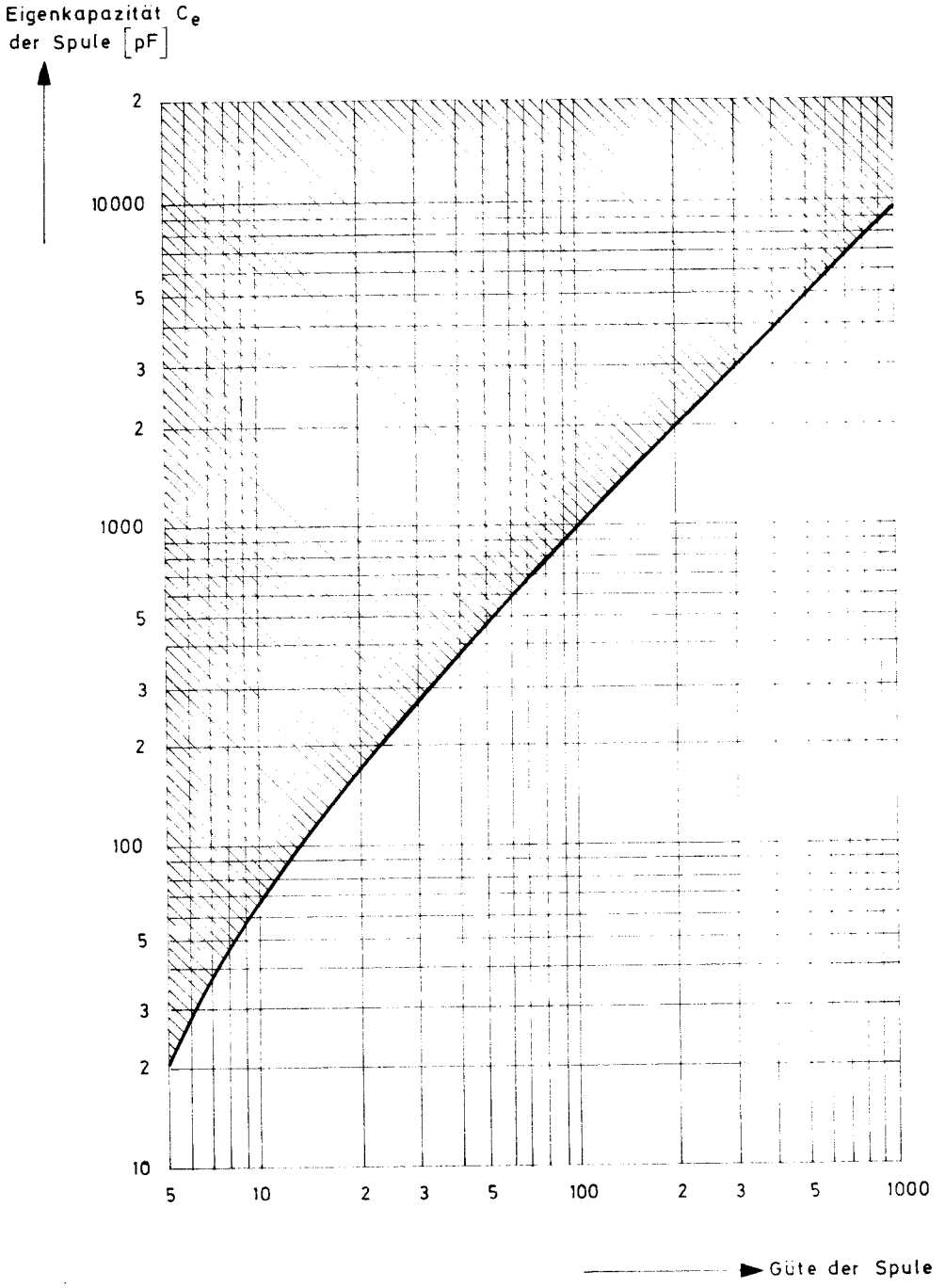

Obere Meßbereichsgrenze für Eigenkapazitäten, abhängig von der Spulengüte

Bild 8.

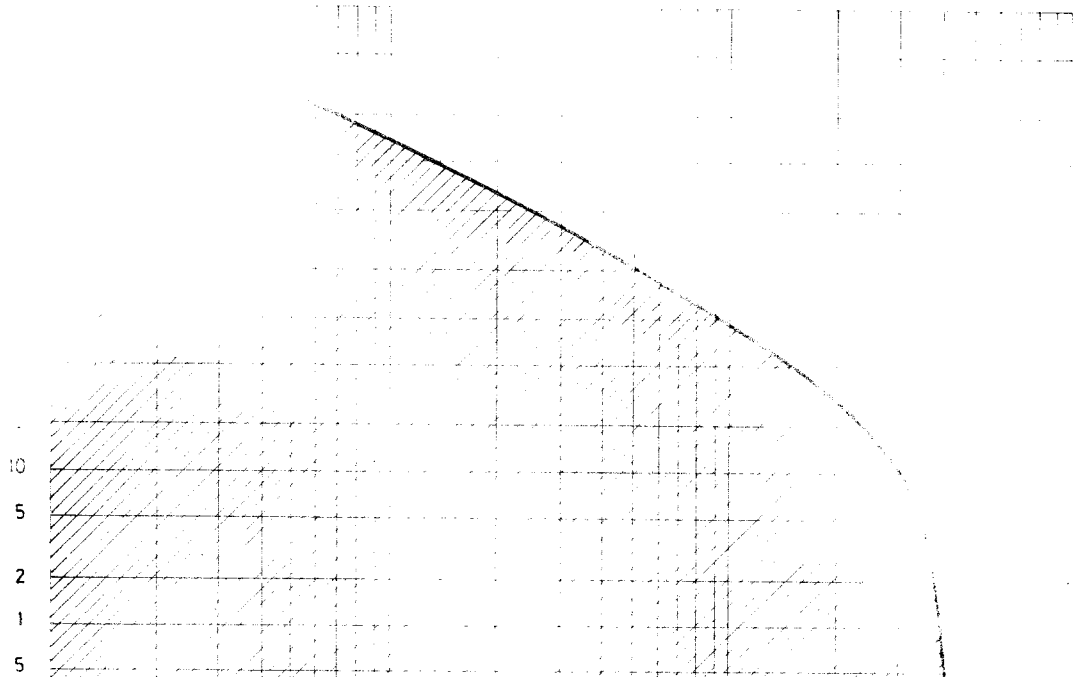
10
5
2
1
5

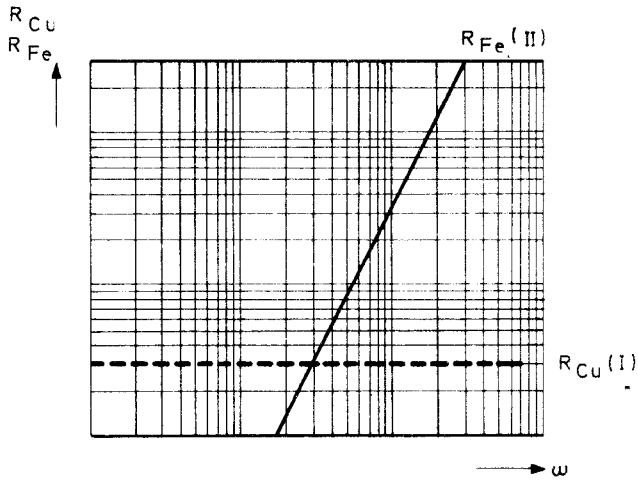

a) Verlauf des Kupfer- sowie des Eisenverlustwiderstandes in Abhängigkeit von der Frequenz

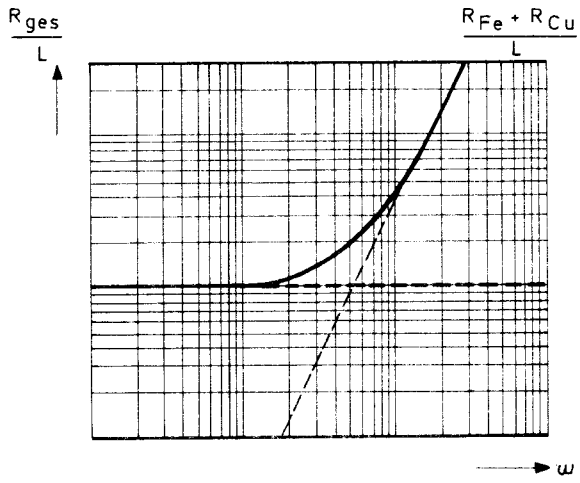

b) Verlauf des gesamten Verlustwiderstandes bezogen auf die Induktivität L der gemessenen Spule in Abhängigkeit von der Frequenz

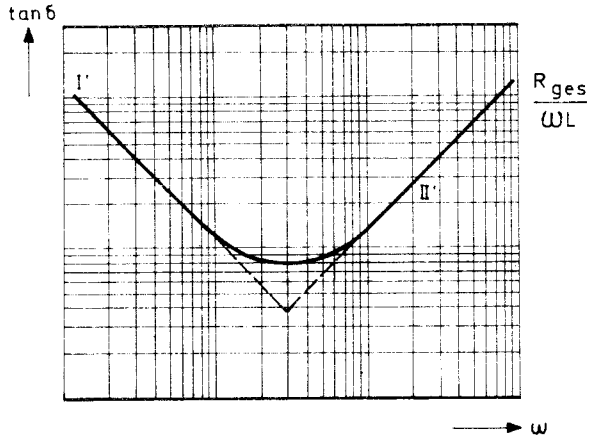

c) Der Verlustfaktor tanδ in Abhängigkeit von der Frequenz

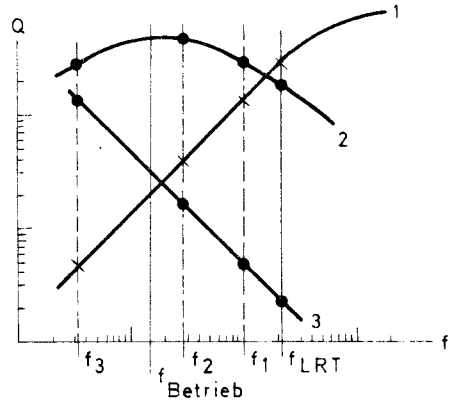

d) Gütekurven in Abhängigkeiten von der Frequenz

Die Abbildungen 10a .. 10d zeigen den prinzipiellen Kurvenverlauf in relativen Maßstäben

Kurven zur Dimensionierung einer Spule mit maximaler Güte

Bild 10.

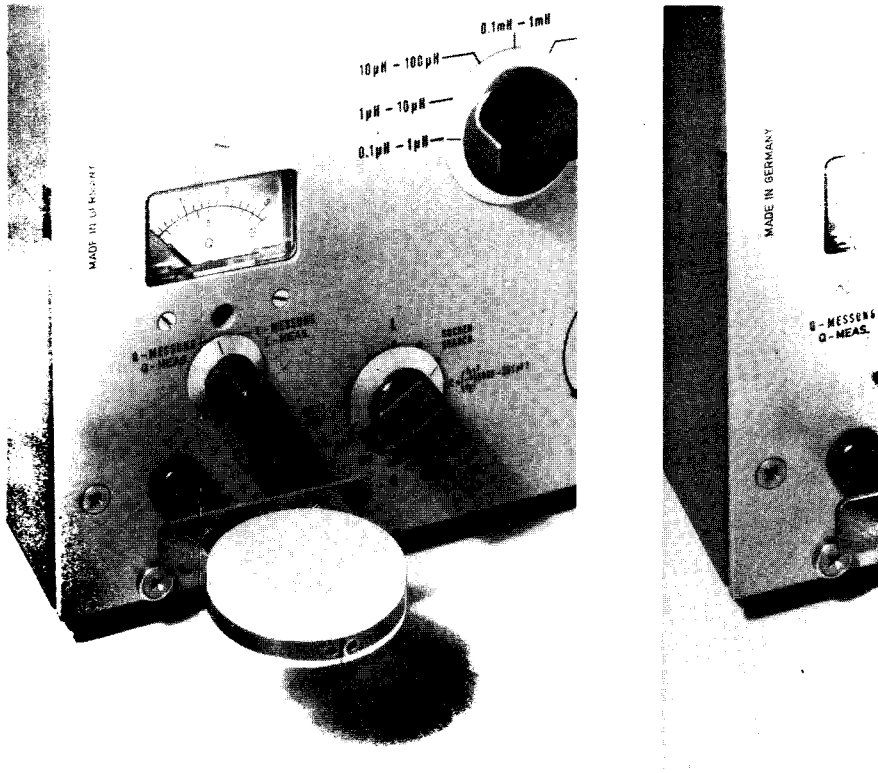

Vorrichtung zum Messen von Induktivitäten unter 100 nH
Links ohne, rechts mit Meßobjekt

Stückliste für die Meßvorrichtung:

2 Leiter
1 Scheibe
1 Steckerplatte
2 Abstandsstücke
2 einschraubbare Bananenstecker mit 4-mm-Gewinde
2 Zahnscheiben 4 DIN 439
2 Muttern M4 DIN 439
2 Buchsen, Fa. Barnes, Typ LB× (oder ähnliche Ausführung, siehe Bulletin Nr. 121 der Fa. Barnes)
2 Zylinderschrauben M 2,3×12 DIN 84

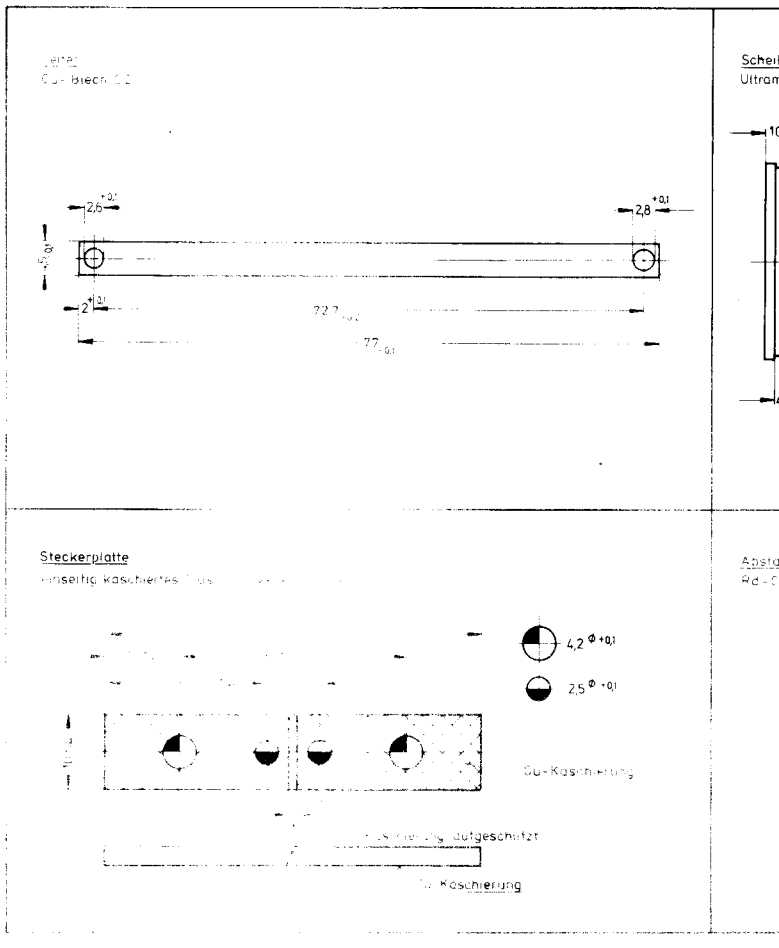

Maßskizzen der Meßvorrichtung

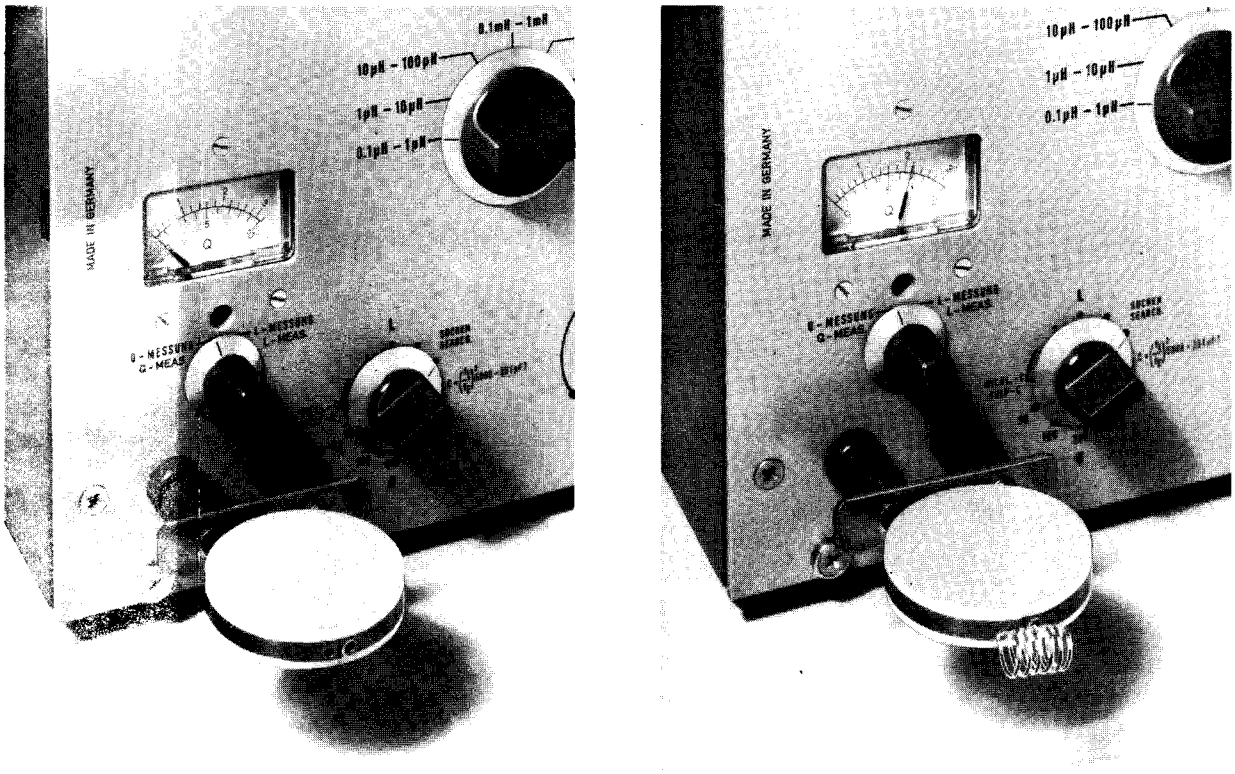

...htung zum Messen von Induktivitäten unter 100 nH. Bild 11.
...s ohne, rechts mit Meßobjekt

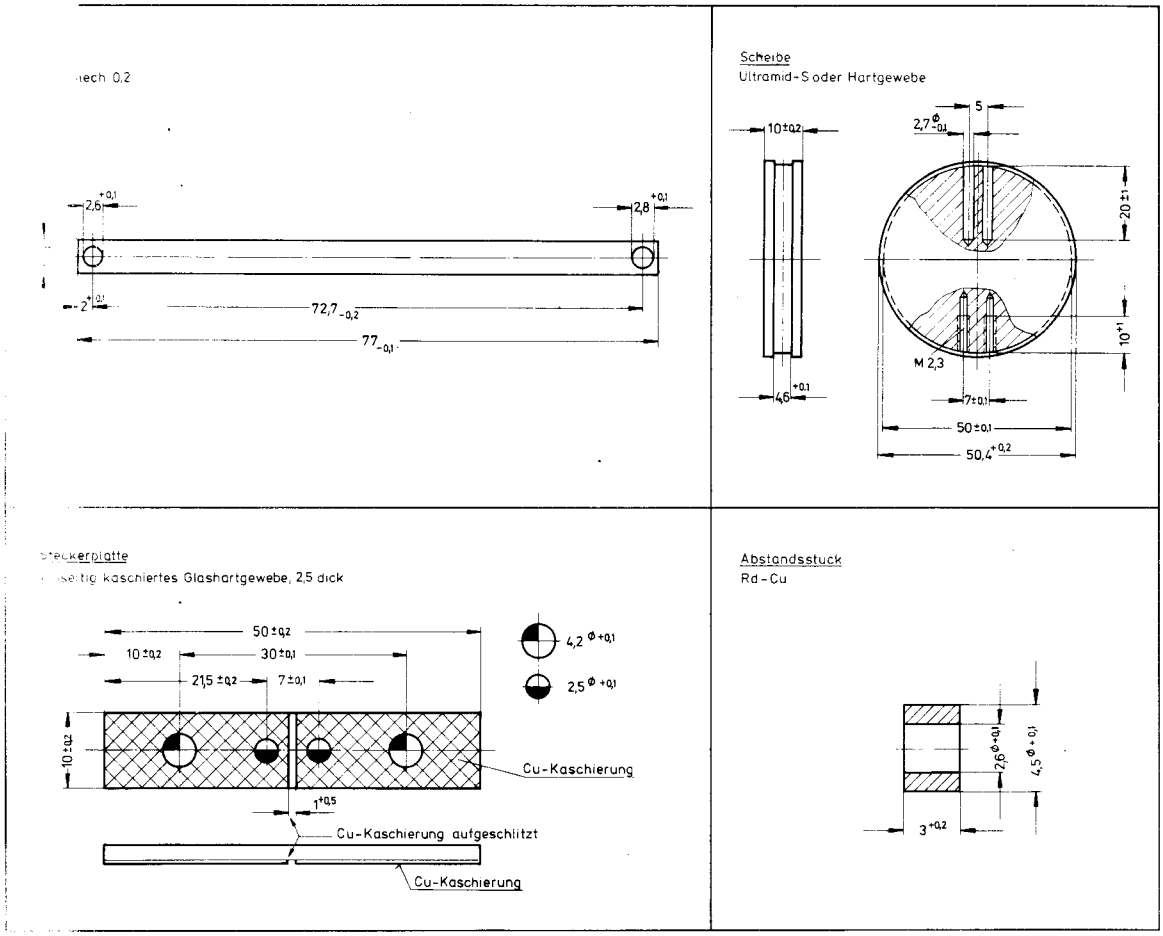

Maßskizzen der Meßvorrichtung Bild 12.

[illegible]

For Translations Not Included in this List See Supplement

Abgesch. Leitung	Shielded lead
Abgesch. Schaltdraht	[illegible] jumper wire
Abgleichkondensator	Trimmer
Abgreifb. Drahtwiderstand	Tapped wire-wound resistor
Ablenkspule	Deflection coil
Ablenkverstärker	Amplifier
Abschirmleitung	Shielded line
Abschlußwiderstand	Terminator
Achse gek. auf L	Shaft shortened to L
Achs-L	Length of shaft
Amphenol-Buchse	Amphenol socket
Änd.-Zust.	Modification
Anodendrossel	Anode choke
Anodenspannung	Anode voltage
Anodenspule	Anode coil
Anodentrafo	Anode transformer
Anreihklemme	Add-on terminal strip
Anschlußkabel	Connecting cable
Anschlußplatte	Connecting plate
Antennenbuchse	Antenna socket
Antennenschalter	Antenna switch
Antennenumschalter	Antenna switch
Anzeigelampe	Indicating lamp
Ausgangsübertrager	Output transformer
Bandfilterspule	Band-pass filter coil
Band-Kabel	Twin lead
Bandpaßspule	Band-pass filter coil
Batteriekabel	Battery cable
Begrenzerspule	Limiting coil
beim Skalenwert	At scale reading
Bemerkungen	Remarks
Benennung	Designation
Bereichsschalter	Range switch
Bereichsspule	Range coil
Betriebsartenschalter	Function selector
Bildröhre	Picture tube
Blindstecker	Dummy plug

Buchse	Socket
Buchsenelement	Female connector
Buchsenleiste	Female multipoint connector
Bügel	Link
Chopper-Verstärker	Chopper amplifier
Cu-Schaltdraht, abgesch.	Shielded copper wire
Dämpfungsglied	Attenuator
Dämpfungswiderstand	Attenuator
Dekadenschalter	Decade switch
Df-Filter	Lead-through filter
Df-Kondensator	Feed-through capacitor
Differenzierspule	Coil
Diskriminatorspule	Discriminator coil
Doppelleitung	Twin line
Doppel-Schichtdrehwiderstand	Variable twin depos.-carbon resistor
Doppeltriode	Twin triode
Drahtdrehwiderstand	Variable wire-wound resistor
Drahtwiderstand	Wire-wound resistor
Drehfeldsystem	Synchro system
Drehkondensator	Variable capacitor
Drehschalter	Rotary switch
Drehspulinstrument	Moving-coil meter
Drehspul-Spannungsmesser	Moving-coil voltmeter
Drehspul-Strommesser mit Gleichrichter in Grätzschaltung	Moving-coil meter with bridge-type rectifier
Drossel	Choke
Drosselleitung	Choke
Drucklüfter	Blower
Drucktaste	Push button
Duo-Diode	Duodiode
Duo-Triode	Duotriode
Durchführungsbuchse	Feed-through socket
Durchführungsfilter	Lead-through filter
Durchführungs-Kondensator	Feed-through capacitor
Eichoszillator	Reference oscillator
Einbaubuchse	Fixed socket
Einbaustecker	Fixed connector
Eingangsspule	Input coil
Eingangsübertrager	Input transformer
einzusetzen in Gerät Type ...	To be inserted into Type ...

[illegible]-Kondensator	[illegible]
[illegible]	Electrolytic capacitor
[illegible]-Pentode	Output pentode
Entbrummer	Hum potentiometer
entfällt	Not provided
enthalten in ...	Included in ...
enth. in ...	Included in ...
Entzerrerdrossel	Choke
Erdklemme	Earth terminal
etwa	Approx.
Filterquarz	Filter crystal
Filterspule	Filter coil
Flachgleichrichter	Rectifier
Flachrelais	Flat-type relay
Flanschdose	Flange socket
Frequenzbereichschalter	Frequency-range selector
Frontansicht	Front view
Frontplatte	Front panel
Gabel-Kippschalter	Toggle switch
Gebläse	Blower
Ge-Diode	Germanium diode
Germaniumdiode	Germanium diode
Ge-Gleichrichter	Germanium rectifier
Generatorspule	Generator coil
Gerätebuchse	Fixed receptacle
Gerätekupplung	Coupling
Gerätestecker	Free receptacle
Gitterkreisspule	Grid-circuit coil
Gleichrichter	Rectifier
Gleichstromrelais	DC relay
Glimmer-Kondensator	Mica capacitor
Glimmlampe	Glow lamp
Glimmstabilisator	Reference tube
Glühlampe	Incandescent lamp
Gr.	Subassembly
Gruppe	Subassembly
Heißleiter	Thermistor
Heizdrossel	Heater choke
Heizkörper	Heater
Heiztrafo	Heater transformer
Heizwiderstand	Heater resistor

HF-Buchse	RF socket
HF-Filterspule	RF filter coil
HF-Kabel	RF cable
Hochfrequenzkabel	[illegible] cable
HF-Kippschalter	RF toggle switch
HF-Relais	RF relay
HF-Spule	RF coil
HF-Teil	RF section
HF-Übertrager	RF transformer
HF-Umschalter	RF switch
hierzu bes. Stromlauf, Schaltteil-liste und Stückliste	See separate circuit diagram parts lists
Hochpaßspule	High-pass filter coil
Hochspannungsgleichrichter	HT rectifier
Hochspannungstrafo	HT transformer
Impulstransformator/Impulsübertrager	Pulse transformer
in Serie	In series
Isolator	Insulator
isoliert eingebaut	Insulated
Kabel	Cable
Kabelbuchse	Cable socket
Kabelstecker	Cable connector
Kaltkatodenröhre	Cold-cathode valve
Kammrelais	Relay
Kapazitätsdiode	Varactor
Katodendrossel	Cathode choke
Katodenstrahlröhre	Cathode-ray tube
Kennzeichen	Ref. No.
Keramikkondensator	Ceramic capacitor
Keramik-Rohrtrimmer	Tubular ceramic trimmer
Keramikspule	Ceramic coil
Keramische Durchführung	Ceramic feed-through
Keram. Scheibentrimmer	Ceramic disc trimmer
Ker- Bp.-Kondensator	Ceramic bypass capacitor
Ker. Df-Kondensator	Ceramic feed-through capacitor
Ker- Waffelkondensator	Ceramic wafer capacitor
Kippschalter	Toggle switch
Klatschkondensator	Bypass capacitor
Klein-Flanschdose	Receptacle with multisocket insert
Kleinkondensator	Miniature capacitor

Kleinkupplungsstecker	Small connector plug
Kleinlampe	Midget lamp
Kleinrelais	Miniature relay
Kleinstufenschalter	Midget rotary switch
Klemmleiste	Terminal strip
Kompensationsspannung	Balancing voltage
Kondensator-Aggregat	Capacitor assembly
Konstanthalter	Stabilizer
Kontaktfeder	Contact spring
Kontaktleiste	Multipoint connector
Koppelkondensator	Coupling capacitor
Koppelschleife	Coupling loop
Koppelspule	Coupling coil
Koppeltrimmer	Coupling trimmer
Kupplungskondensator	Coupling capacitor
Korrektions-Kondensator	Correction capacitor
Korrektionstrimmer	Correction trimmer
Kreisspule	Circuit coil
Kristall-Diode	Crystal diode
Kristall-Gleichrichter	Crystal rectifier
Ks-Kondensator	Plastic-foil capacitor
Kunstfolienkondensator	Plastic-foil capacitor
Kurzhubstecker	Short-stroke connector
Kurzschließer	Shorting link
Kurzschlußstecker	Shorting plug/ Shorting bar
Lackfolienkondensator	Film capacitor
Lackkondensator	Film capacitor
Laufzeitkette	Delay line
Lautsprecher	Loudspeaker
Leistungspentode	Power pentode
Leitung geschirmt	Shielded cable
Leitungskreis	Transmission line
Leuchtstoff-Glimml.	Luminescent glow lamp
Leuchttaster	Illuminated pushbutton
Liste besteht aus ... Blatt	List consists of ... pages
Luftabgleichkondensator	Air trimmer
Luftblockkondensator	Air capacitor
Luftdrehkondensator	Variable air capacitor
Luftfilter	Air filter
Lufttrimmer	Air trimmer
Lüfter	Blower

Magnetspule	Magnet coil
Meßbereichschalter	Range switch
Meßgleichrichter	Meter rectifier
Meßimpulsverzögerung	Test-pulse delay
Meßschalter	Check switch
Meßtransformator	Precision transformer
Meßverstärker	Meter amplifier
Mikrofonkabel	Microphone cable
Mikroschalter	Micro switch
mit Isolier-Zubehör	With insulating accessory
mit Skala nach ...	With scale according to ...
Motorrelais	Motor relay
MP-Kondensator	MP capacitor
MP-Motorkondensator	MP motor capacitor
Nachstimmeinheit	Tuning unit
Nachstimm-Kondensator	Trimming capacitor
Nebenwiderstand	Shunt resistor
Netz	AC supply
Netzdrossel	Power choke
Netzgerät	Power supply
Netzgleichrichter	Power rectifier
Netzkabel	Power cable
Netzschalter-Kombination	Power switch assembly
Netzteil	Power supply
Netztrafo	Power transformer
Netztransformator	Power transformer
Netzübertrager	Power transformer
NF-Schaltung	AF circuit
Nockenschalter	Cam switch
Normalkondensator	Standard capacitor
Örtliche Lage im Gerät	Location in the set
Oszillatorspule	Oscillator coil
Oszillographenröhre	Cathode-ray tube
Papier-Df-Kondensator	Feed-through paper capacitor
Papierkondensator	Paper capacitor
16-polig	16-pole
Potentiometer	Potentiometer
Präzisionsdrehwiderstand	Variable precision resistor
Projektionslampe	Projector lamp
Prüffeld	Test department
Prüfspannung	Test voltage

Quarz	Crystal
Quarz-Anodenspule	Crystal anode coil
Quarzbandfilter	Crystal bandpass filter
Quarzfassung	Crystal holder
Quarzfilter	Crystal filter
Quarzthermostat	Oven
Quetschkondensator	Bypass capacitor
Rahmenkontakt	Loop antenna contact
Rahmenkreisspule	Loop circuit coil
Rahmenspule	Loop coil
Referenz-Element	Reference element
Regellampe	Pilot lamp
Regelteil	Stabilizer
Reihenklemme 2 teilg.	2-point terminal strip (or block)
Relais	Relay
Resonanzübertrager	Resonance transformer
Ringspule	Toroidal coil
Röhre	Valve (US: tube)
Rohrkondensator	Tubular capacitor
Rohrkreis	Tubular circuit
Rückansicht	Rear view
Rundkondensator	Round capacitor
Rundrelais	Round relay
R&S-Sach-Nr.	R&S Stock No.
Sach-Nr.	Stock No.
Saugkreisspule	Trap coil
Schaltbuchse	Socket (with switching contact)
Schaltdraht	Jumper
Schaltebene	Switch deck
Schalteraggregat	Switch assembly
Schaltkapazität	Circuit capacitance
Schaltsatz	Switch assembly
Schaltscheibe	Wafer
Schaltteilliste	Parts list
Scheibenschalter	Wafer switch
Scheibentrimmer	Disc trimmer
Scheibentriode	Disc-seal triode
Schicht-Drehwiderstand	Variable depos.-carbon resistor
Schichtwiderstand	Depos.-carbon resistor/ Film resistor
Schiebeschalter	Slide switch
Schirmleitung	Shielded wire

Schmelzeinsatz	Fuse
Schmelzsicherung	Fuse
Schütz	Contactor
Schutzschaltung	Protective circuit
Schwingkreisspule	Tank-circuit coil
Schwingquarz	Oscillator crystal
Schwingspule	Oscillator coil
Schwingübertrager	Transformer
Selengleichrichter	Selenium rectifier
Sicherung	Fuse
Si-Diode	Silicon diode
Silizium-Diode	Silicon diode
Si-Gleichrichter	Silicon rectifier
Signalglimmmlampe	Pilot glow lamp
Signallampe	Pilot lamp
Si-Kapazitäts-Diode	Silicon capacitor
Skalenendwert	Full-scale value
Skalenlampe	Scale lamp
Soffittenlampe	Tubular lamp
Sonde	Probe
Spannungsteiler	Voltage divider
Spannungswähler	Tapping panel (Fuse strip)
Spannungswandler	Voltage transformer
Spitzendiode	Point-contact diode
Spule	Coil
Spulenschalter	Coil switch
Stabilisator	Reference tube
Stabrelais	Thermal mercury relay
Starkstromklemme	Power terminal
Steckdose	Socket
Stecker	Plug
Steckerleiste	Male multipoint connector
Steckgleichrichter	Plug-in type rectifier
Steuerquarz	Oscillator crystal
Stift	Pin
Stiftkondensator	Pin capacitor
Strommesser	Meter
Stromversorgungskabel	Power cable
Stromwandler	Current transformer
Stückzahl	Quantity
Stufenschalter	Rotary switch

Tantal-Elko	Electrolytic tantalum capacitor
Teiler-Kondensator	Attenuator capacitor
Teilerschalter	Attenuator switch
Teilerwiderstand	Divider resistor
Telefonbuchse, isol.	Floating telephone jack
Thermokontakt	Thermal contact
Thermo-Relais	Thermal relay
Thermoschalter	Thermal switch
Thermostat-Quarz	Crystal (thermostat)
Thermostattrafo	Thermostat transformer
Tiefpaßspule	Low-pass filter coil
TP-Filterspule	Low-pass filter coil
Transistorpaar	Pair of transistors
Trimmwert	Factory-adjusted
Trockenelement	Dry cell
Tuchelдose	Tuchel-type socket
Trenntrafo	Isolating transformer
Tiefpass	Low-pass filter
Trimmer	Trimmer
Trocken-Batterie	Dry battery
Übertrager	Transformer
Umrüstbuchse, isol.	Floating adaptable socket
Umrüst-Dezifix	Adaptable Dezifix
Umschalter	Switch
Umschaltklemme	Voltage selector
Umschaltplatte	Switching panel
Vario-Diode	Varactor
Variometer	Variometer
Varistor	Varistor
Ventilator	Blower
Verbindungskabel	Patch cord
Verbindungslasche	Connection link
Verbindungsstück	Connection cable
verdrahtet nach ...	Wired according to ....
verdrillt	Twisted
Verdrosselung	Choke
Verklatschungskondensator	Bypass capacitor
Voreingest. auf	Factory-adjusted to
Vorübertrager	Transformer
Varactor-Diode	Varactor

Wechselstromrelais	AC relay
Werte	Ratings
Winkelstecker	Angle connector
Winkelstück	Angle section
Zenerdiode	Zener diode
Zerhacker	Vibrator
Zerhackertrafo	Vibrator transformer
ZF-Filterspule	IF filter coil
ZF-Teil	IF section
Zusatzspule	Additional coil
Zwerggliimmlampe	Miniature glow lamp

Supplement to standard translations for parts lists

bearb. aus ...	... of ...
Drehko	Variable capacitor
Drehspulstrommesser	Moving coil meter
entsprechend Trimmplan abgeglichen	Adjusted according to [illegible]
hierzu bes. Stückliste	See sep. parts list
Kf-Kondensator	Synth.-foil capacitor
Ker. Rohrtrimmer	Tubular ceramic trimmer
KT-Kondensator	Synth.-foil capacitor
L-Meßgerät	L meter
mit Seele	With wire ...
MKT-Kondensator	Metallized synth.-foil capacitor
Netzschalter	Power switch
Netzspg.	AC supply voltage
Rändelklemme	Knurled terminal
Schalter	Switch
Si-Trans.	Silicon transistor
Verdrahtungsinduktivität	Wiring inductance
zusammen	Together
zusätzl. 2 St. Ersatz	Additionally 2 spares
zusätzl. je 2 St. Ersatz	Additionally 2 spares each

XMX Kennzeichen	Stückzahl	Benennung	Sach-Nr.		Bemerkungen
1	2	3	4	5	6
Bu 1		Rändelklemme	KLB 14421		
Bu 2		Rändelklemme	KLB 14421		
Bu 3		Kontaktleiste	FUL 30112		
C 1		MKT-Kondensator	CKG 50054 u 2,2		
C 2		MKT-Kondensator	CKG 50054 u 1		
C 3		KT-Kondensator	CKK 54564 n 220		
C 4		KT-Kondensator	CKK 54564 ...		n 100 Trimmwert
C 5		KT-Kondensator	CKK 54564 n 47		
C 6		KT-Kondensator	CKK 54564 n 22		
C 7		KT-Kondensator	CKK 54564 n 4,7		
C 8		KT-Kondensator	CKK 62564 n 2,2		
C 9		KT-Kondensator	CKK 54564 n 10		
C10		KT-Kondensator	CKK 54564 n 10		
C11		MKT-Kondensator	CKG 50054 u 1		
C13		Lufttrimmer	CV 8025		
C14		Lufttrimmer	CV 8025		
C15		Lufttrimmer	CV 8025		
C16		Lufttrimmer	CV 8025		
C17		Lufttrimmer	CV 8025		
C18		Kf-Kondensator	CKD 2/30/500		Trimmwert
C19		Lufttrimmer	CV 8025		
C20		Lufttrimmer	CV 8025		

Diese Ausarbeitung ist unser Eigentum. Vervielfältigung, unbefugte Verwertung, Mitteilung an andere sind strafbar und schadenersatzpflichtig.

ROHDE & SCHWARZ
MÜNCHEN

Änd.-zust.	Änd.-Mittlg. Nr.	Datum	Name
f	12943	7.67	Ws
g	13498	1.68	H.W

1CDE	Datum	Name
geschrieben	7.67	
bearbeitet		Ws
geprüft		
normgeprüft		

Liste Nr. 6100 Sa

Liste besteht aus 8 Blatt

Blatt Nr. 1

Ersatz für Liste

Schaltteilliste zu L-Meßgerät Type LRT

Kennzeichen	Stückzahl	Benennung	Sach-Nr.		Bemerkungen
1	2	3	4	5	6
C21		Kf-Kondensator	CKD 1/125/125		Trimmwert
C23		Drehko	5100 - 4.44		bearb.aus CD 8527
C25		Lufttrimmer	CV 8110		
C26		Keramik-Kondensator	CCG 11/0,5		
C27		Ker.Rohrtrimmer	CVC 72692 p 3		
C28		Lufttrimmer	CV 8110		
C29		Lufttrimmer	CV 8125		
C30		Lufttrimmer	CV 8125		
C31		Kf-Kondensator	CKD 1/30/125		
C32		Keramik-Kondensator	CCG 11/0,5		
C33		Ker.Rohrtrimmer	CVC 72692 p 9		
C34		Kf-Kondensator	CKD 1/.../125		Trimmwert
C35		Lufttrimmer	CVC 11512 p 30		zusammen 5ooo pF ± 2 °/oo;
C36		Kf-Kondensator	CKS 52157 n 4,9		
C38		Elko	CED 21/250/35		
C39		Elko	CED 21/250/35		
C40		Elko	CED 21/250/35		
C41		Kf-Kondensator	CKD 1/16/125		Trimmwert
C42		Kf-Kondensator	CKD 1/16/125		Trimmwert
C43		KS-Kondensator	CKD 2/1ooo/125		
C46		KT-Kondensator	CKK 54564 n 47		

Diese Zeichnung ist unser Eigentum. Vervielfältigung oder sonstige Verwertung, Mitteilung an andere ist strafbar und schadenersatzpflichtig.

ROHDE & SCHWARZ
MÜNCHEN

1CDE	Datum	Name
geschrieben	7.67	
bearbeitet		Ws
geprüft		
normgeprüft		

Änd.-zust.	Änd.-Mittlg. Nr.	Datum	Name
f	12943	7.67	Ws
g	13498	1.68	H.W
h	13805	6.68	Ws

Liste Nr. 6100 Sa

Liste besteht aus Blatt

Blatt Nr. 2

Ersatz für Liste

Stückliste / Schaltteilliste zu

L-Meßgerät Type LRT

XXX Kennzeichen	Stückzahl	Benennung	Sach-Nr.		Bemerkungen
1	2	3	4	5	6
C48		Tantalelko	CEU 36443 u 47		
C49		MKT-Kondensator	CKG 50053 n 470		
C51		Kf-Kondensator	CKD 1/250/125		
C53		Tantalelko	CEU 36543 u 100		
C54		MKT-Kondensator	CKG 50053 n 470		
C55		MKT-Kondensator	CKG 50053 n 470		
C56		MKT-Kondensator	CKG 50053 n 470		
C57		MKT-Kondensator	CKG 50053 n 470		
C59		Keramik-Kondensator	CCG 55/15		
C60		Keramik-Kondensator	CCG 55/12		
C61		Keramik-Kondensator	CCH 11/4		
G1 1		Gleichrichter	GNB 75541		
G1 3		Z-Diode ZX 18	GEX 25640 E 18		
G1 4		Ge-Diode OA 95	GCE 17420		

Diese Zeichnung ist unser Eigentum. Vervielfältigung, unbefugte Verwertung, Mitteilung an andere ist strafbar und schadenersatzpflichtig.

ROHDE & SCHWARZ
MÜNCHEN

1CDE	Datum	Name
geschrieben	7.67	
bearbeitet		Ws
geprüft		
normgeprüft		

Änd.-zust.	Änd.-Mittlg. Nr.	Datum	Name
f	12943	7.67	Ws
h	13805	6.68	Ws

Liste Nr. 6100 Sa

Liste besteht aus Blatt

Blatt Nr. 3

Ersatz für Liste

XXXXXX / Schaltteilliste zu

L-Meßgerät Type LRT

Kenn-zeichen	Stück-zahl	Benennung	Sach-Nr.		Bemerkungen
1	2	3	4	5	6
Gl 7		Ge-Diode OA 95	GCE 17420		
Gl 8		Ge-Diode OA 95	GCE 17420		
Gl 9		Ge-Diode OA 95	GCE 17420		
Gl10		Ge-Diode OA 95	GCE 17420		
Gl12		Ge-Diode OA 95	GCE 17420		
J 1		Drehspulstrommesser	JPS 10...		
K 1		HF-Kabel	LKK 91ooo		
K 2		HF-Kabel	LKK 91ooo		
K 3		HF-Kabel	LKK 91ooo		mit Seele LD 208
L 1		Schwingspule (Gr.)	6100 - 6.11		hierzu bes.Stückliste
L 2		Schwingspule (Gr.)	6100 - 6.12		hierzu bes.Stückliste
L 3		Schwingspule (Gr.)	6100 - 6.13		hierzu bes.Stückliste
L 4		Schwingspule (Gr.)	6100 - 6.14		hierzu bes.Stückliste
L 5		Schwingspule (Gr.)	6100 - 6.15		hierzu bes.Stückliste
L 6		Schwingspule (Gr.)	6100 - 6.16		hierzu bes.Stückliste
L 7		Schwingspule (Gr.)	6100 - 6.17		hierzu bes.Stückliste

Ohne Zustimmung ist unser Eigentum Vervielfältigung, unbefugte Verwertung, Mitteilung an andere ist strafbar und schadenersatzpflichtig.

ROHDE & SCHWARZ
MÜNCHEN

1CDE	Datum	Name
geschrieben	7.67	
bearbeitet		Ws
geprüft		
normgeprüft		

Änd.-zust.	Änd.-Mittlg. Nr.	Datum	Name
f	12943	7.67	Ws
h	13805	6.68	Ws

Liste Nr. 6100 Sa

Liste besteht aus Blatt

Blatt Nr. 4

Ersatz für Liste

Schaltteilliste zu L-Meßgerät Type LRT

XX/XX Kennzeichen	Stückzahl	Benennung	Sach-Nr.		Bemerkungen
1	2	3	4	5	6
L 8		Verdrahtungs-induktivität			entsprechend Trimmplan abgeglichen
R 1		Schichtwiderstand	WFE 321 E 390		
R 2		Schichtwiderstand	WFE 521 E 270		
R 4		Schichtwiderstand	WFE 521 E 270		
R 6		Schicht-Drehwiderst.	WSG 11010/1 M		
R 7		Schichtwiderstand	WFE 321 k 22[illegible]		
R 8		Schichtwiderstand	WFE 321 k 15[illegible]		
R 9		Schichtwiderstand	WFE 321 k 1		
R11		Schichtwiderstand	WFE 321 k 10		
R12		Schichtwiderstand	WFE 321 k 27		
R14		Schichtwiderstand	WFE 321 k 10		
R15		Schichtwiderstand	WFE 321 k 1		
R16		Schichtwiderstand	WFE 321 E 470		
R17		Schichtwiderstand	WFE 521 M 18		Trimmwert
R18		Schichtwiderstand	WFE 321 M 4,7		Trimmwert
R19		Schichtwiderstand	WFE 321 M 4,7		Trimmwert
R20		Schichtwiderstand	WFE 321 M 4,7		Trimmwert
R21		Schichtwiderstand	WFE 321 E 330		

Diese Zeichnung ist unser Eigentum. Vervielfältigung, unbefugte Verwertung, Mitteilung an andere ist strafbar und schadenersatzpflichtig.

ROHDE & SCHWARZ
MÜNCHEN

1CDE	Datum	Name
geschrieben	7.67	
bearbeitet		Ws
geprüft		
normgeprüft		

Änd.-zust.	Änd.-Mittlg. Nr.	Datum	Name
f	12943	7.67	Ws

Liste Nr. 6100 Sa

Liste besteht aus Blatt

Blatt Nr. 5

Ersatz für Liste

Schaltteilliste zu

L-Meßgerät Type LRT

Kenn-zeichen	Stück-zahl	Benennung	Sachnr.		Bemerkungen
1	2	3	4	5	6
R28		Schichtwiderstand	WFE 321 k 1		
R29		Schichtwiderstand	WFE 321 M 20		
R31		Schicht-Drehwiderst.	WSG 11000/ k		
R34		Schicht-Drehwiderst.	WSG 11000/ k		
R35		Schichtwiderstand	WFE 321 k		
R37		Schichtwiderstand	WFE 321 k 220		
R38		Schichtwiderstand	WFE 321 k 4,7		
R40		Schichtwiderstand	WFE 321 k 4,7		
R41		Schichtwiderstand	WFE 321 k 6,8		
R42		Schicht-Drehwiderst.	WSG 11000/250 k		
R43		Schichtwiderstand	WFE 321 B 100		
R44		Schichtwiderstand	WFE 321 B 10		
R45		Schicht-Drehwiderst.	WSG 11000/50 B		
R47		Schichtwiderstand	WFE 321 k 1,5		
R48		Schichtwiderstand	WFE 321 E 22		

Diese Zeichnung ist unser Eigentum Vervielfältigung, unbefugte Verwertung, Mitteilung an andere ist strafbar und schadenersatzpflichtig.

-Pause Nr.

Nr.

R/S ROHDE & SCHWARZ MÜNCHEN

1CDE	Datum	Name
geschrieben	7.67	
bearbeitet		Ws
geprüft		
normgeprüft		

Änd.-zust.	Änd.-Mittlg. Nr.	Datum	Name
f	12943	7.67	Ws

Liste Nr. 6100 Sa

Liste besteht aus Blatt

Blatt Nr. 6

Ersatz für Liste

Stückliste / Schaltteilliste zu L-Meßgerät Type LRT

Kennzeichen	Stückzahl	Benennung	Sach-Nr.		Bemerkungen
1	2	3	4	5	6
R51		Schichtwiderstand	WFE 321 k 470		
R52		Schichtwiderstand	WFE 321 k 10		
R53		Schichtwiderstand	WFE 321 k 2,2		
R54		Schichtwiderstand	WFE 341 k 150		
R55		Schicht-Drehwiderst.	WS 9126/10 k		
R56		Schichtwiderstand	WFE 321 k 150		Trimmwert
R57		Schichtwiderstand	WFE 321 k 1		
R58		Schichtwiderstand	WFE 321 k 15		
R59		Schichtwiderstand	WFE 321 M 6,8		Trimmwert
R60		Schichtwiderstand	WFE 321 k 100		Trimmwert
R61		Heißleiter	WHD 232/10 k/10		
Rl 1		Kleinlampe	RLT 32400		zusätzl.2 St.Ersatz
S 1		Schalter (Gr.)	6100 - 6.18		hierzu bes.Stückliste
S 2		Schalter (Gr.)	6100 - 1.11		hierzu bes.Stückliste
S 3		Stufenschalter	SRW 12560		Achs-L = 22
S 4		Spannungswähler	FD 60502		
S 5		Netzschalter	SDE 32012		
Si 1		Schmelzeinsatz	M 0,1 C DIN 41571 x) M 0,05 C DIN 41571 x)		115...125 V 220...235 V Netzspg.
					x) zusätzl.je 2 St. Ersatz

Diese Zeichnung ist unser Eigentum. Vervielfältigung, unbefugte Verwertung, Mitteilung an andere ist strafbar und schadenersatzpflichtig.

ROHDE & SCHWARZ
MÜNCHEN

1CDE	Datum	Name
geschrieben	7.67	
bearbeitet		Ws
geprüft		
normgeprüft		

Änd.-zust.	Änd.-Mittlg. Nr.	Datum	Name
f	12943	7.67	Ws
g	13498	1.68	H.W

Liste Nr. 6100 Sa

Liste besteht aus Blatt

Blatt Nr. 7

Ersatz für Liste

Schaltteilliste zu L-Meßgerät Type LRT

Lfd. Nr. Kenn-zeichen	Stück-zahl	Benennung	Sach-Nr.		Bemerkungen
1	2	3	4	5	6
St 1		Gerätestecker	FES 21ooo		
T 1		Si-Trans. BFY 19	GQF 24346		
T 2		Si-Trans. BFY 39 III	GQF 25443		
T 5		Si-Trans. E 103	GSF 24661		
T 6		Si-Trans. BFY 39 II	GQF 25441		
T 7		Si-Trans. BFY 39 II	GQF 25441		
T 8		Si-Trans. BFY 39 II	GQF 25441		
Tr 1		Netztrafo (Gr.)	5100 - 7.10		hierzu bes.Stückliste

Diese Zeichnung ist unser Eigentum. Vervielfältigung, unbefugte Verwertung, Mitteilung an andere ist strafbar und schadenersatzpflichtig.

ROHDE & SCHWARZ MÜNCHEN

	Datum	Name
TCDE		
geschrieben	6.68	Wü
bearbeitet		Ws
geprüft		
normgeprüft		

Änd.-zust.	Änd.-Mittlg. Nr.	Datum	Name
h	13805	6.68	Ws

Liste Nr. 6100 Sa

Liste besteht aus Blatt

Blatt Nr. 8

Ersatz für Liste

Stückliste / Schaltteilliste zu L-Meßgerät Type LRT

Translations for Drawings and Diagrams

Abstimmung	Tuning
Anzeige	Indication
Anzeigeverstärker	Meter amplifier
auf 5000 pF abgeglichen	Adjusted to 5000 pF
Auf Leiterseite gesehen	Seen from the conductive side
Frontplatte	Front panel
Kontakt 1 gleichzeitig Schleifer	Contact 1 serves as wiper
L-Messung	L meas.
Meßkreis	Test circuit
Netz	Power
Netzteil	Power supply
Platte	Circuit board
Q-Messung	Q meas.
Spannungen gemessen mit Röhrenvoltmeter (R_e > 10 MΩ) gegen Masse	Voltages measured to chassis with valve voltmeter (Z_{in} > 10 MΩ)
Spulenplatte	Coil panel
Suchen	Searching
Verbindung der Punkte 9, 10, 11, 12 im Schalter selbst enthalten	Connection of points 9, 10, 11, 12 within the switch
Wicklung-C	Self-C

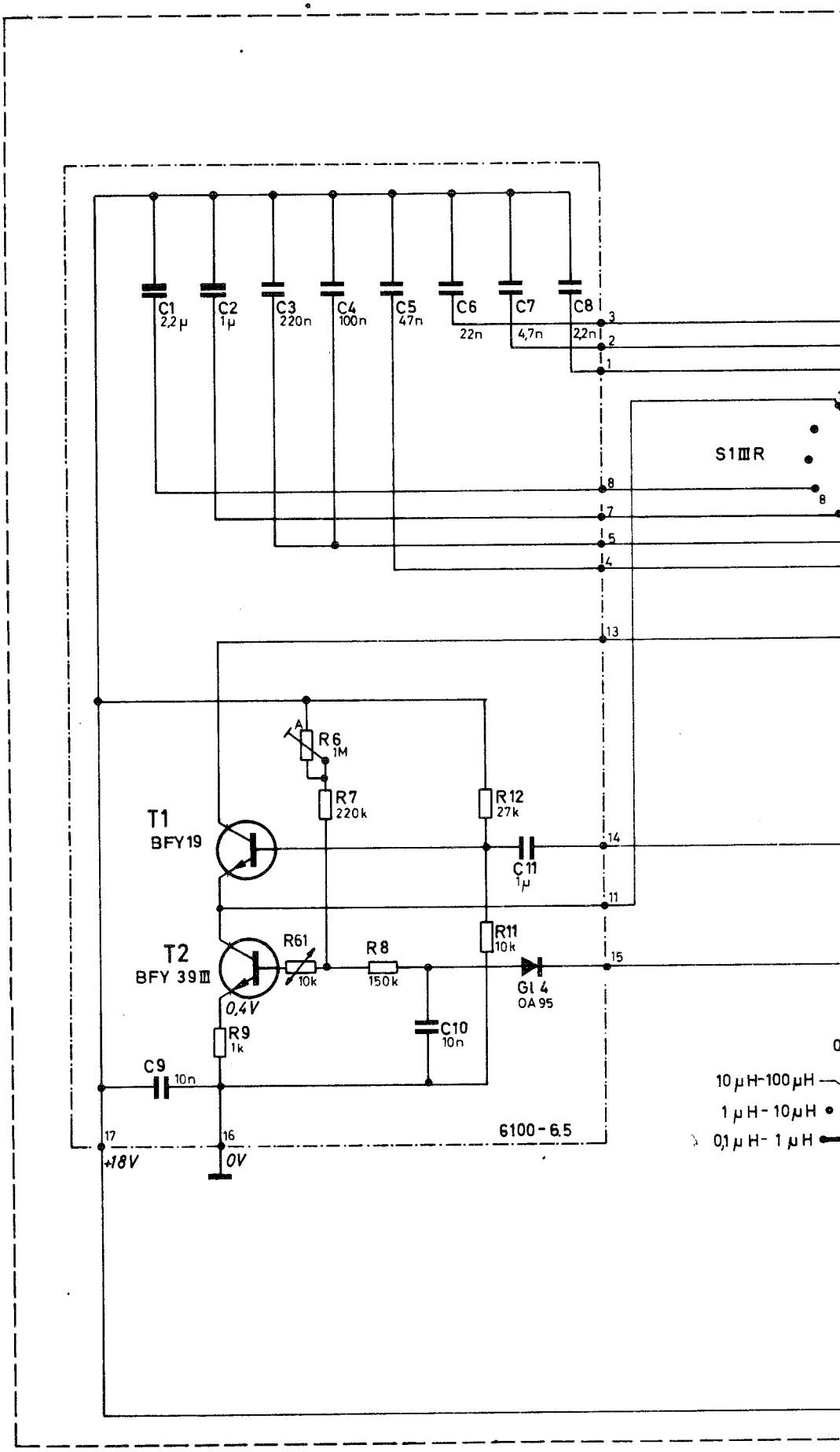

ROHDE & SCHWARZ · MÜNCHEN

b	13490	12.1.68	MW
c	13806	1 7 68	Ws

2 3 4

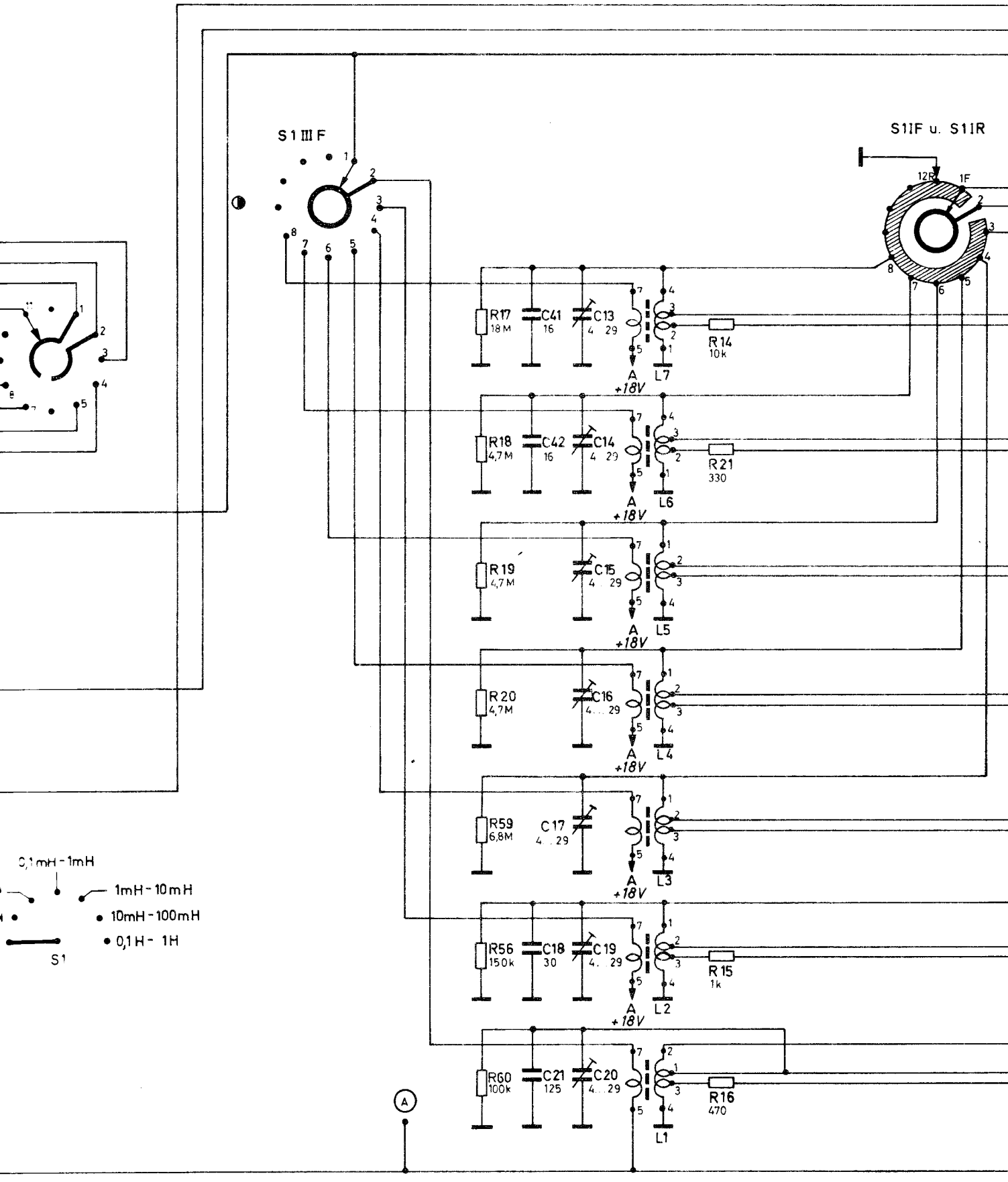
S1 III F
S1 IF u. S1 IR
12R
1F
R17 18M
C41 16
C13 4...29
R14 10k
A +18V
L7
R18 4,7M
C42 16
C14 4...29
R21 330
L6
R19 4,7M
C15 4...29
L5
R20 4,7M
C16 4...29
L4
R59 6,8M
C17 4...29
L3
R56 150k
C18 30
C19 4...29
R15 1k
L2
R60 100k
C21 125
C20 4...29
R16 470
L1
A
0,1mH - 1mH
1mH - 10mH
10mH - 100mH
0,1H - 1H
S1

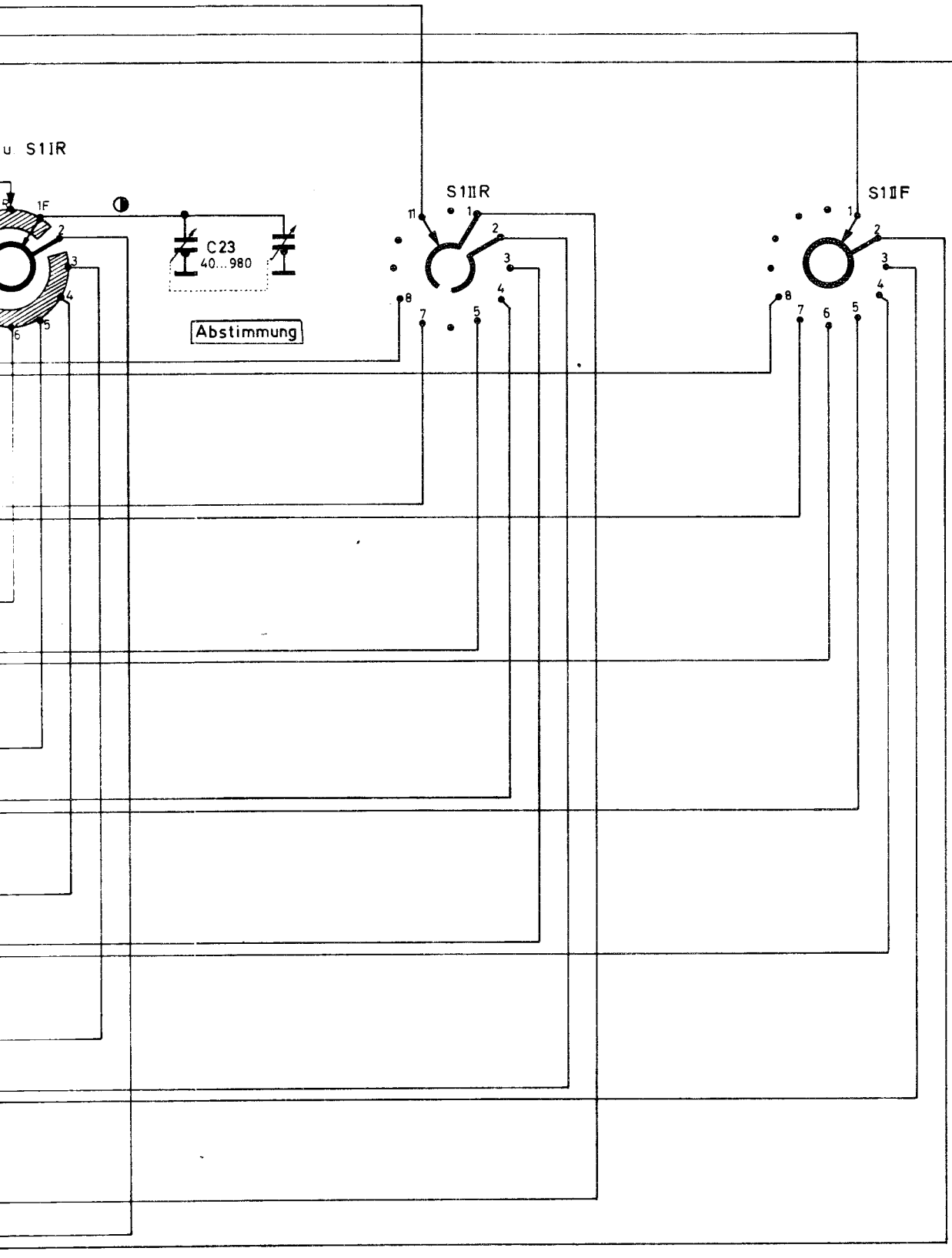
u. S1IR
1F
2
3
4
5
6
C23
40...980
Abstimmung
S1IIR
11
1
2
3
4
5
7
8
S1IIF
1
2
3
4
5
6
7
8

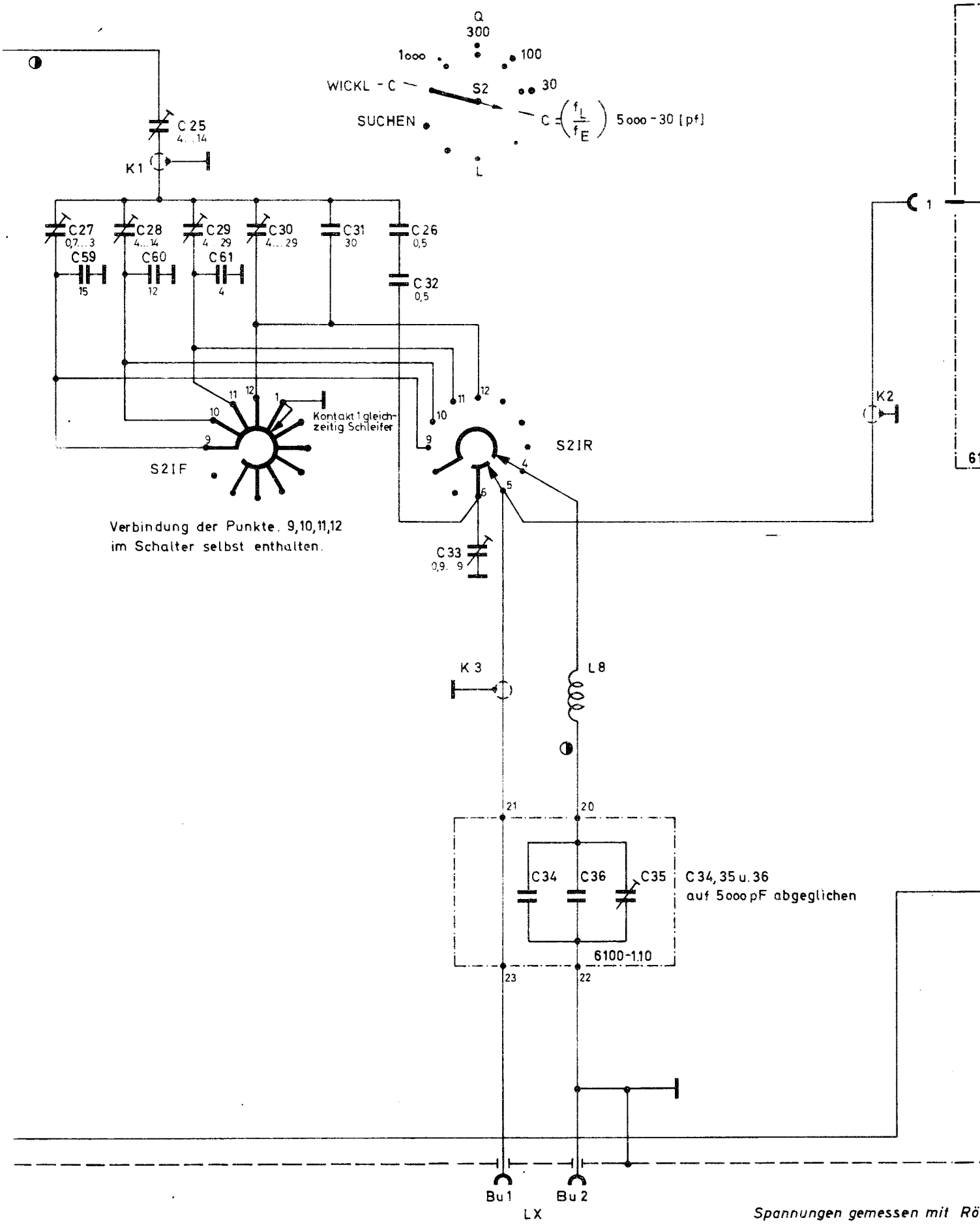
Q
300
1000
100
WICKL - C
S2
30
SUCHEN
C = (fL/fE) 5000 - 30 [pf]
L
C25
4...14
K1
C27
0,7...3
C28
4...14
C29
4...29
C30
4...29
C31
30
C26
0,5
C32
0,5
C59
15
C60
12
C61
4
Kontakt 1 gleichzeitig Schleifer
S2IF
S2IR
K2
Verbindung der Punkte. 9,10,11,12
im Schalter selbst enthalten.
C33
0,9...9
K3
L8
C34
C36
C35
C34, 35 u. 36
auf 5000 pF abgeglichen
6100-1.10
Bu1
Bu2
LX
Spannungen gemessen mit Rö

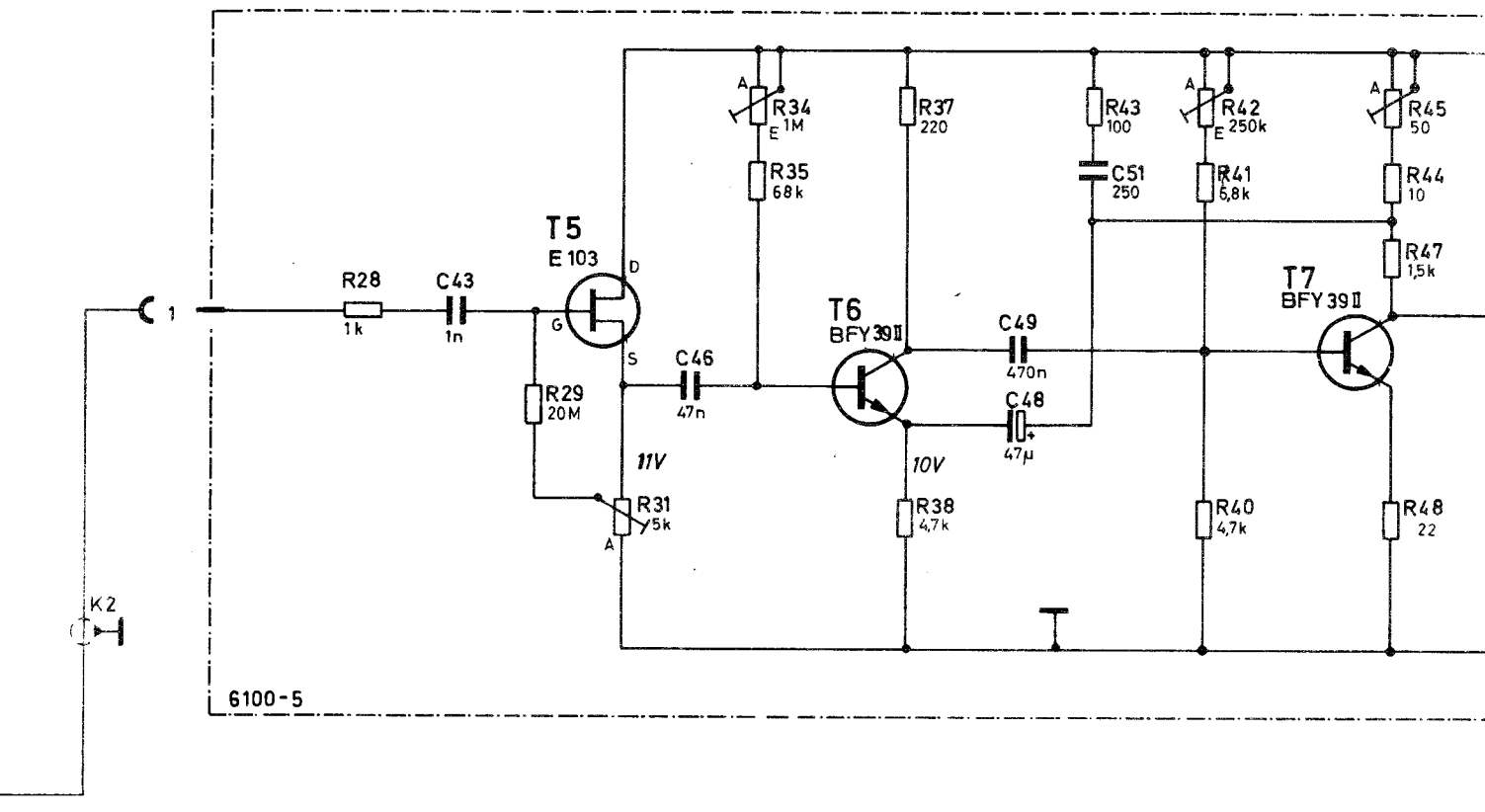

Q-Messu

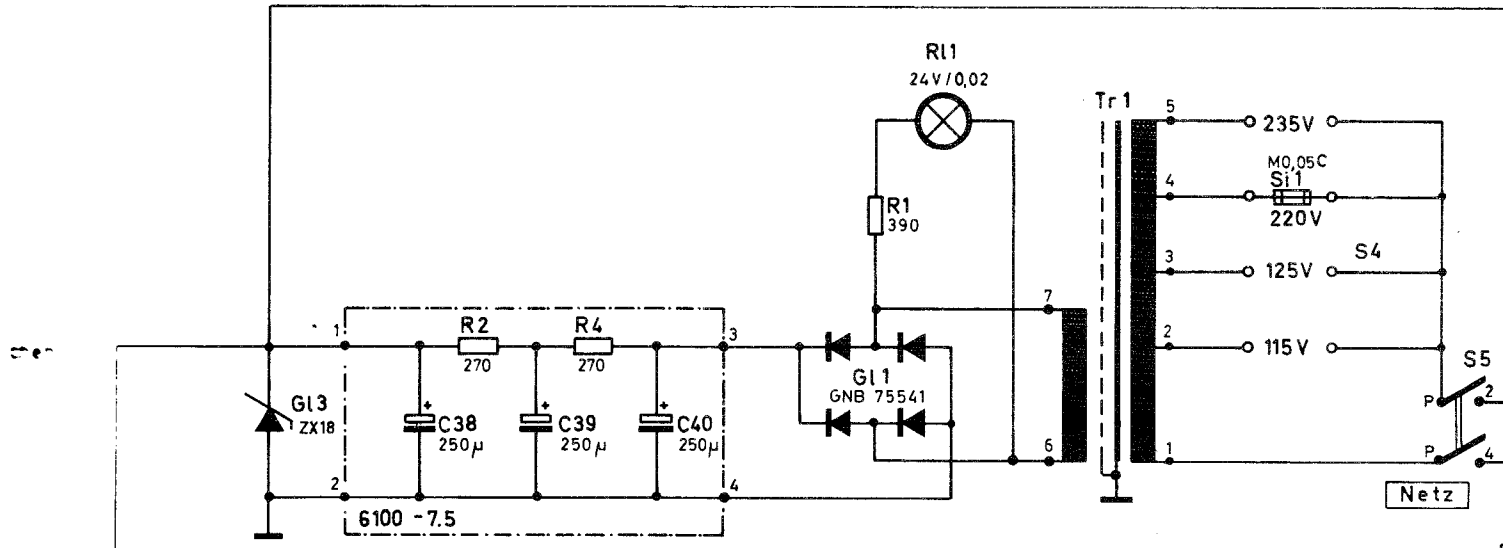

Netzteil

St1

...en gemessen mit Röhrenvoltmesser (Re ≥ 10MΩ) gegen Masse

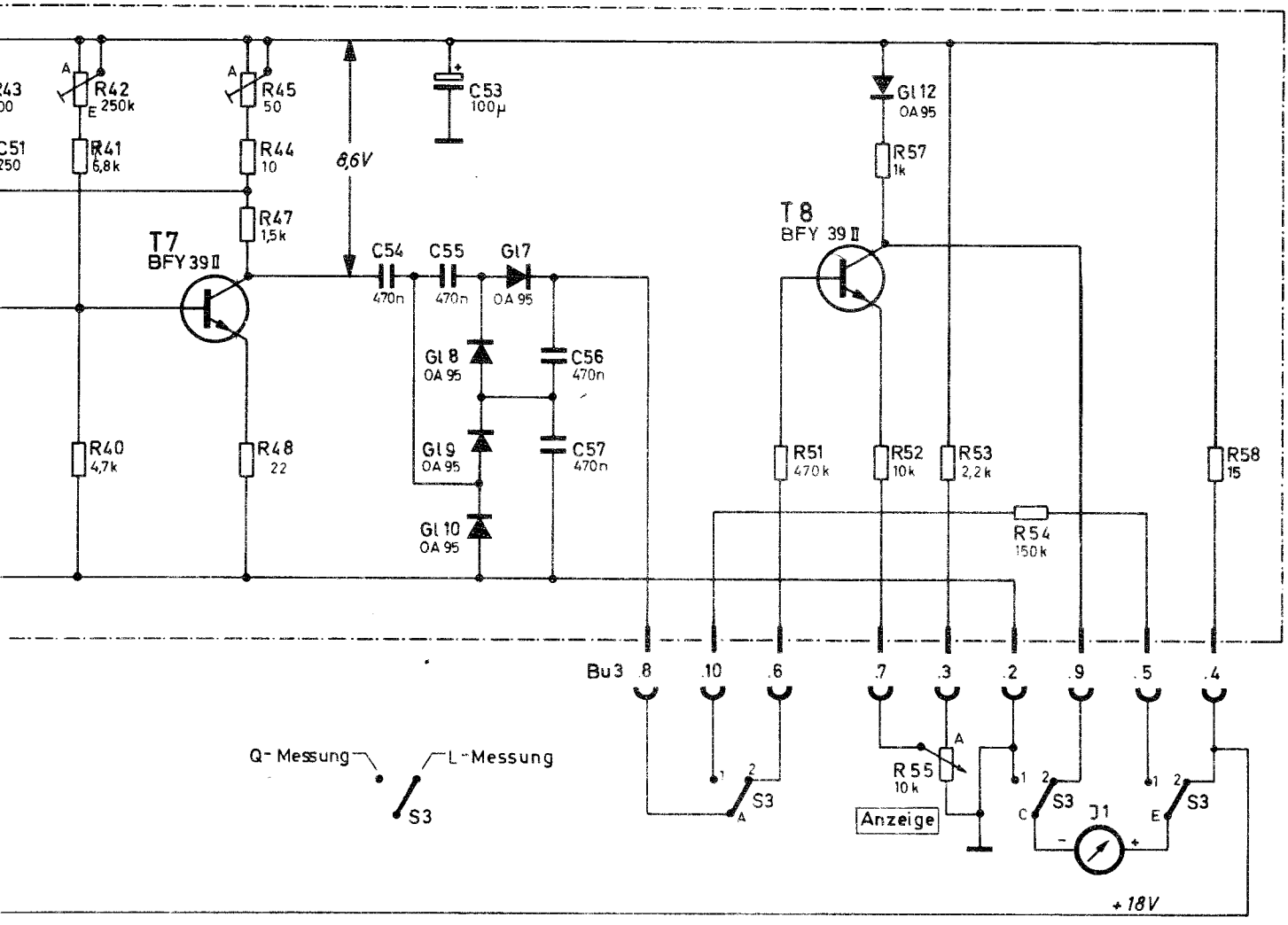

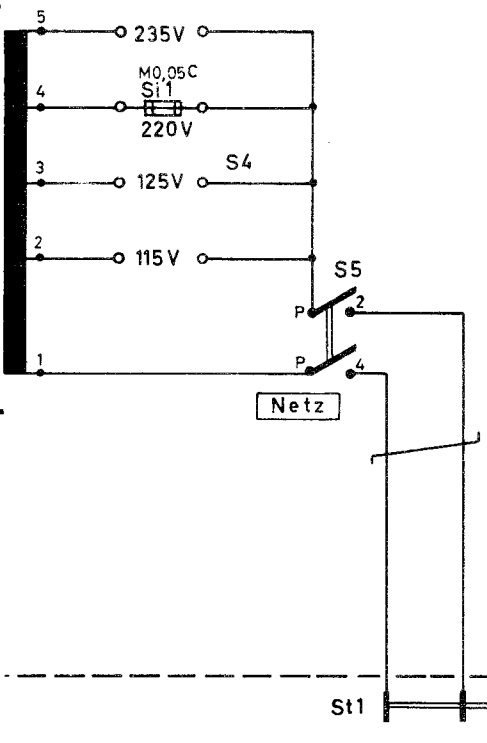

Stromlauf zu

L-Meßgerät Type LRT

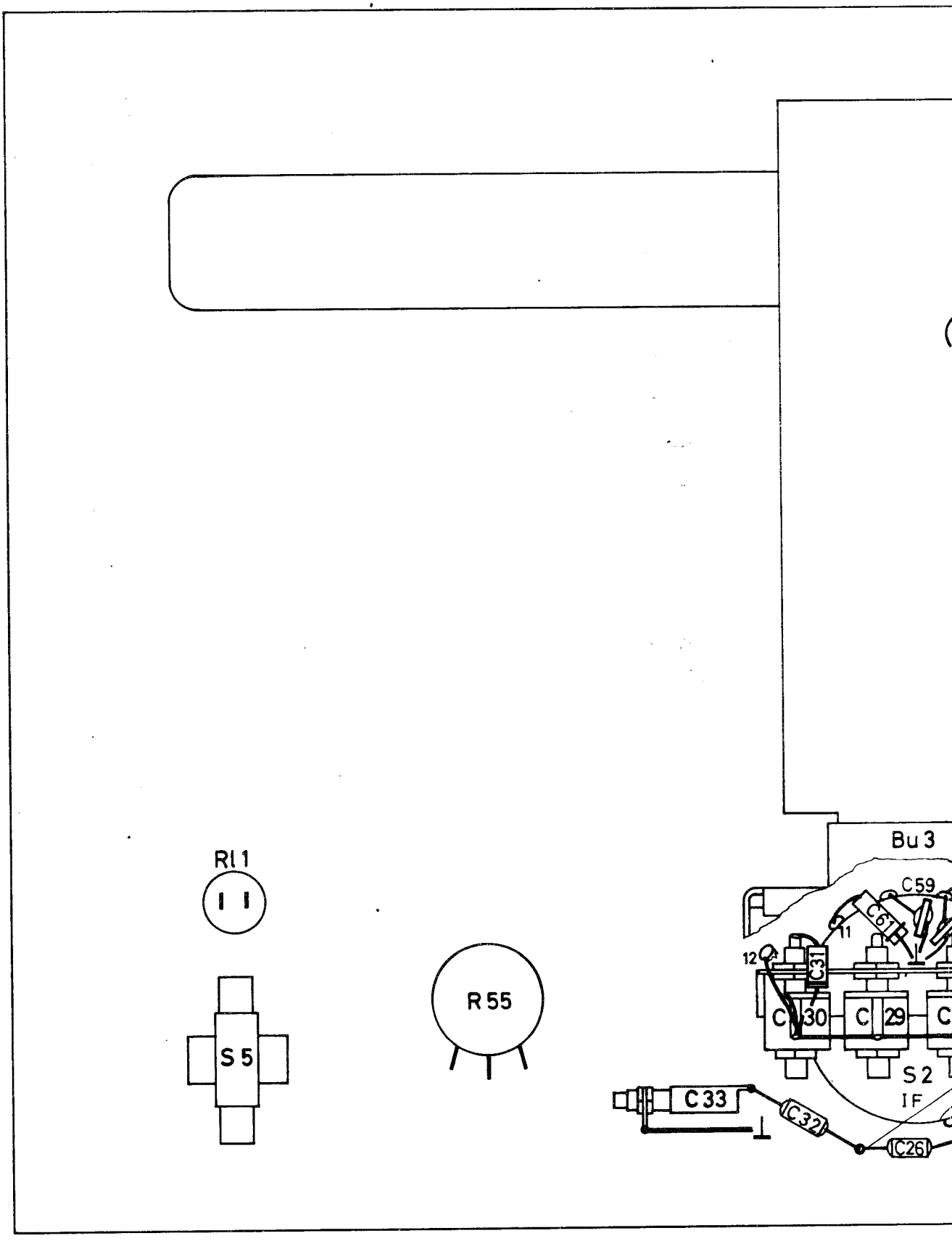

ROHDE & SCH
MÜNCHE

1CDE	Datum
ge erchnet	4.67
bearbeitet	
geprüft	
normgepr.	

2 3 4 5

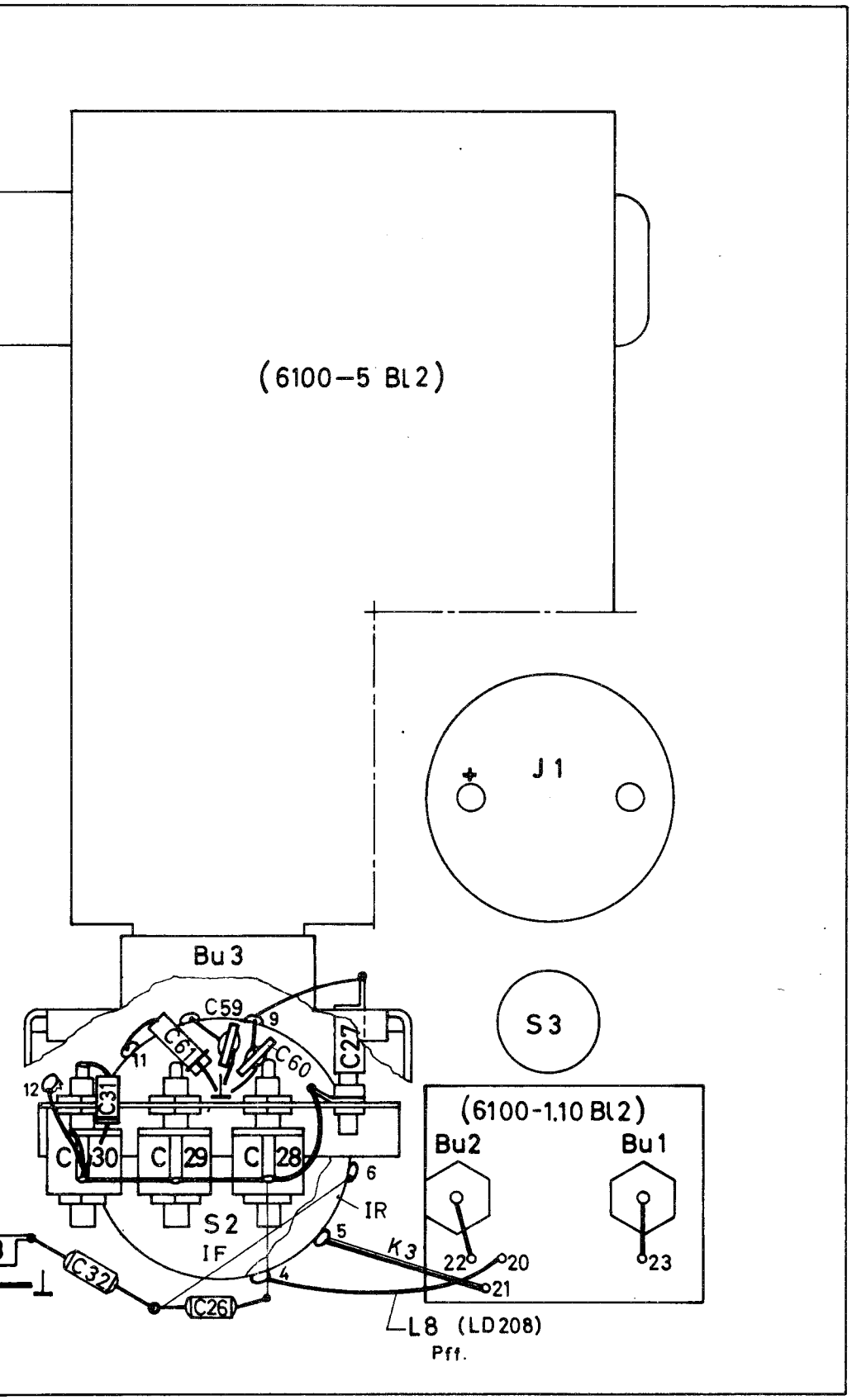

ROHDE & SCHWARZ MÜNCHEN			Halbzeug, Werkstoff				Untolerierte Maße	Zeichn. Nr.
1CDE	Datum	Name	Änd. zust.	Änd.-Mittlg. Nr.	Datum	Name	Maßstab	6100 – 1 Bl. 2
ge erchnet	4.67		a	—	4. 9. 67	Pe-ko	—	Ersatz f. Zeichn.
bearbeitet								
geprüft							Frontplatte (Gr.)	
normgepr.								

tauchgelötet nach HVN 230

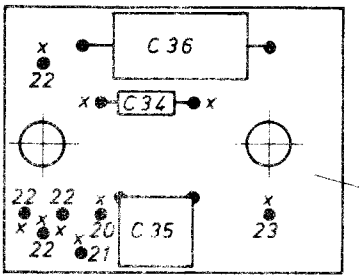

x KLL 30804 (9 Stück)

C 34 im Prüffeld gelötet nach HVM 230

Zeichnung besteht aus 2 Blatt
hierzu 6100-1.10 St

Diese Zeichnung ist unser Eigentum. Vervielfältigung, unbefugte Verwertung, Mitteilung an andere ist strafbar und schadenersatzpflichtig.

ROHDE & SCHWARZ MÜNCHEN			Halbzeug, Werkstoff				Untolerierte Maße	Zeichn. Nr.
1CDD	Tag	Name	Änd. zust.	Änd.-Mittlg. Nr.	Tag	Name	Maßstab 1:1	6100-1.10 Bl.1
gezeichnet	28.9.66	Wm	a	13214	16.10.67	Ka		Ersatz f. Zeichn.
bearbeitet							Platte (Gr.)	
geprüft								
normgepr.								

Auf Leiterseite gesehen

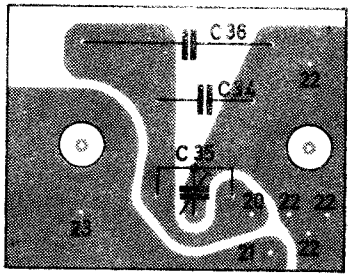

Diese Zeichnung ist unser Eigentum Vervielfältigung, unbefugte Verwertung, Mitteilung an andere ist strafbar und schadenersatzpflichtig.

ROHDE & SCHWARZ MÜNCHEN			Halbzeug, Werkstoff				Untolerierte Maße	Zeichn. Nr.
1CDE	Datum	Name	Änd. zust.	Änd.-Mittlg. Nr.	Datum	Name	Maßstab 1 : 1	6100 – 1.10 Bl. 2
gezeichnet	22.9.67							Ersatz f. Zeichn.
bearbeitet		Ka						
geprüft								
normgepr.								

Platte (Gr.)

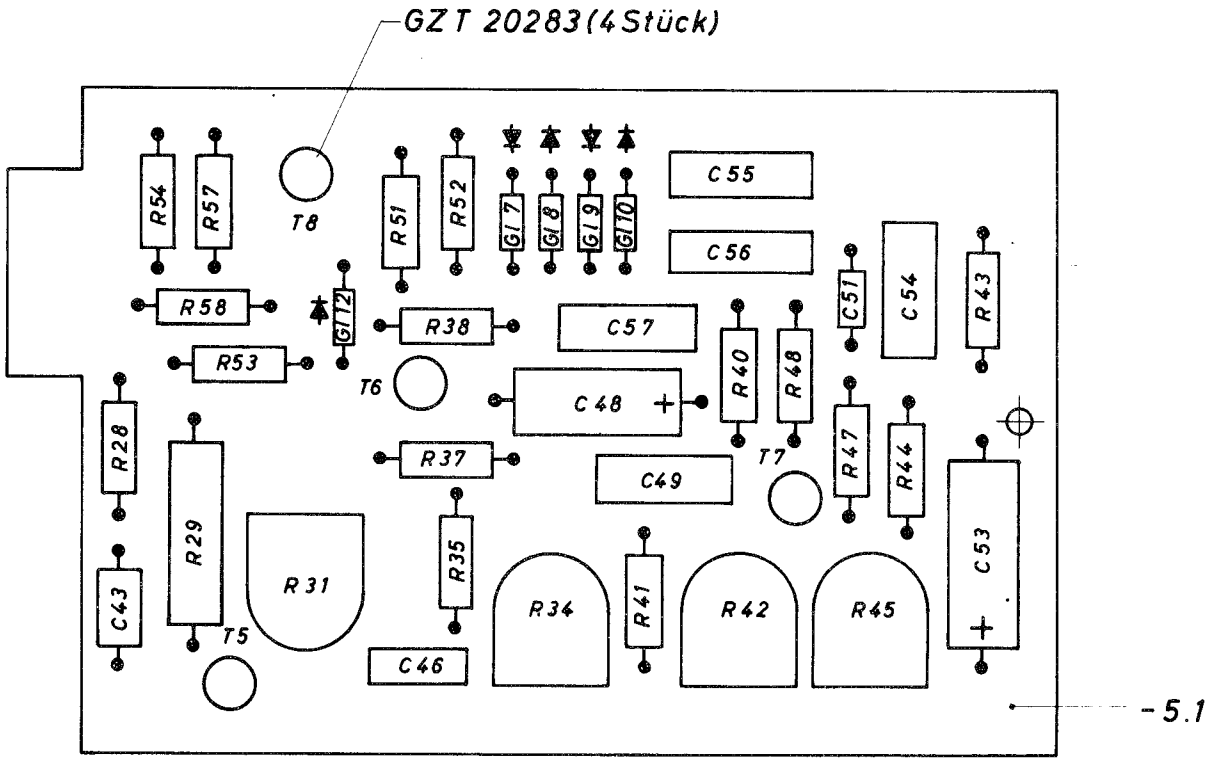

ROHDE & SCHWARZ MÜNCHEN			Halbzeug, Werkstoff			
1CDD	Datum	Name	Änd. zust.	Änd.-Mittlg. Nr.	Datum	Name
gezeichnet	8 7.67	Wh.	b	12943	19.7.67	Ss
bearbeitet			c	13214	16.10.67	Ka
geprüft						
normgepr.						

3 4 5 6

Auf Leiterseite gesehen

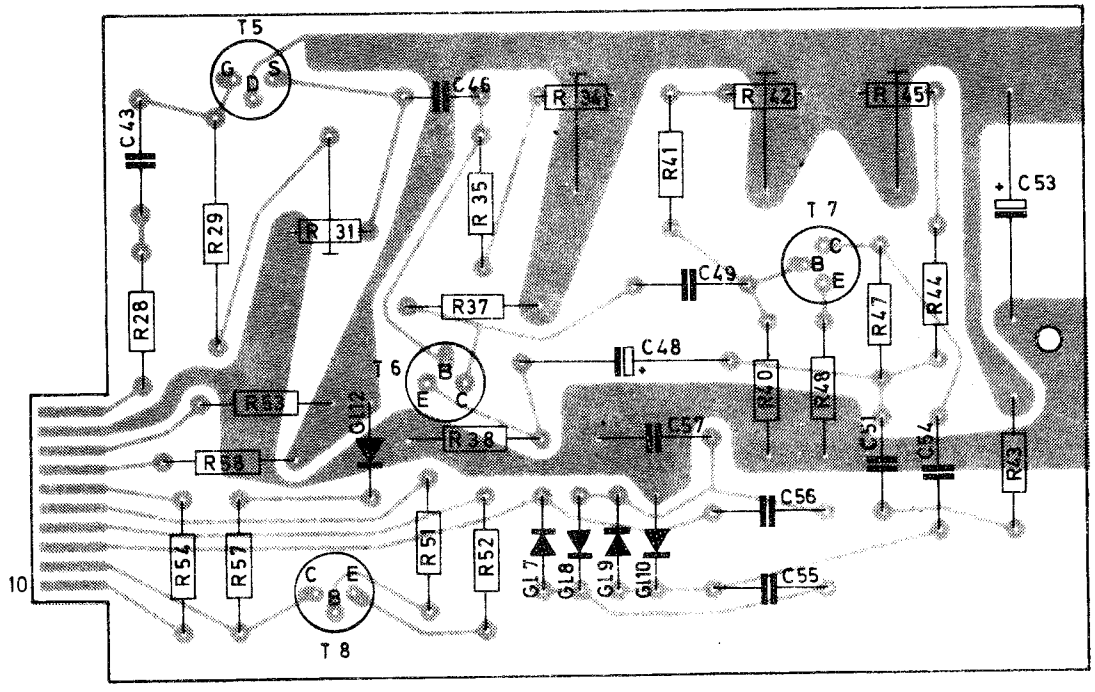

Diese Zeichnung ist unser Eigentum Vervielfältigung, unbefugte Verwertung, Mitteilung an andere ist strafbar und schadenersatzpflichtig

ROHDE & SCHWARZ MÜNCHEN			Halbzeug, Werkstoff			Untolerierte Maße	Zeichn. Nr. 6100 - 5 Bl. 2
1CDE	Datum	Name	Änd. zust.	Änd.-Mittlg. Nr	Datum	Name	Maßstab 1 : 1
gezeichnet	1. 9. 67	Wil					Ersatz f. Zeichn.
bearbeitet		Ka					Platte (Gr.)
geprüft							
normgepr.							

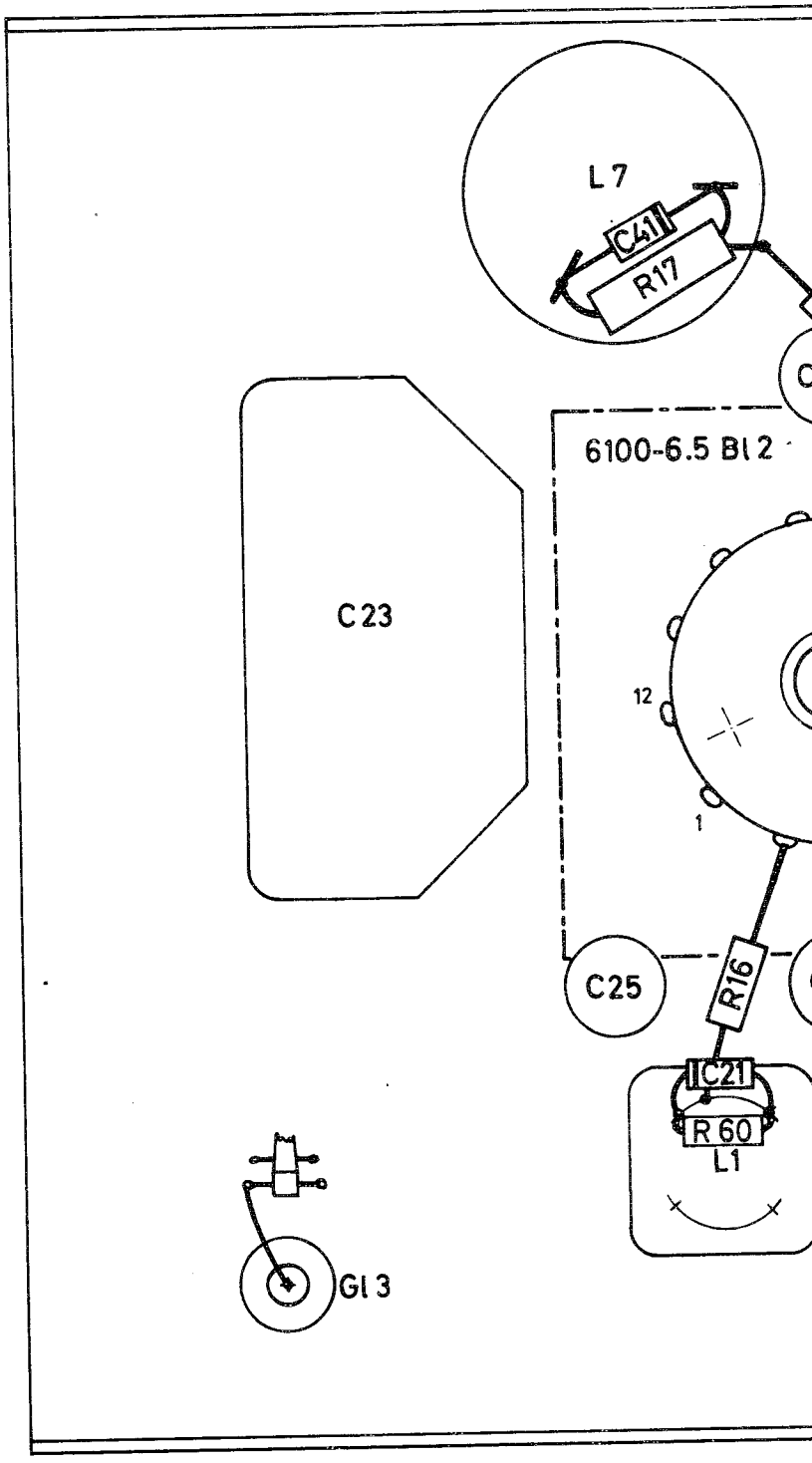

Diese Zeichnung ist unser Eigentum. Vervielfältigung jeg. unbefugte Verwertung, Mißbrauch usw. anderer ist strafbar und schadenersatzpflichtig.

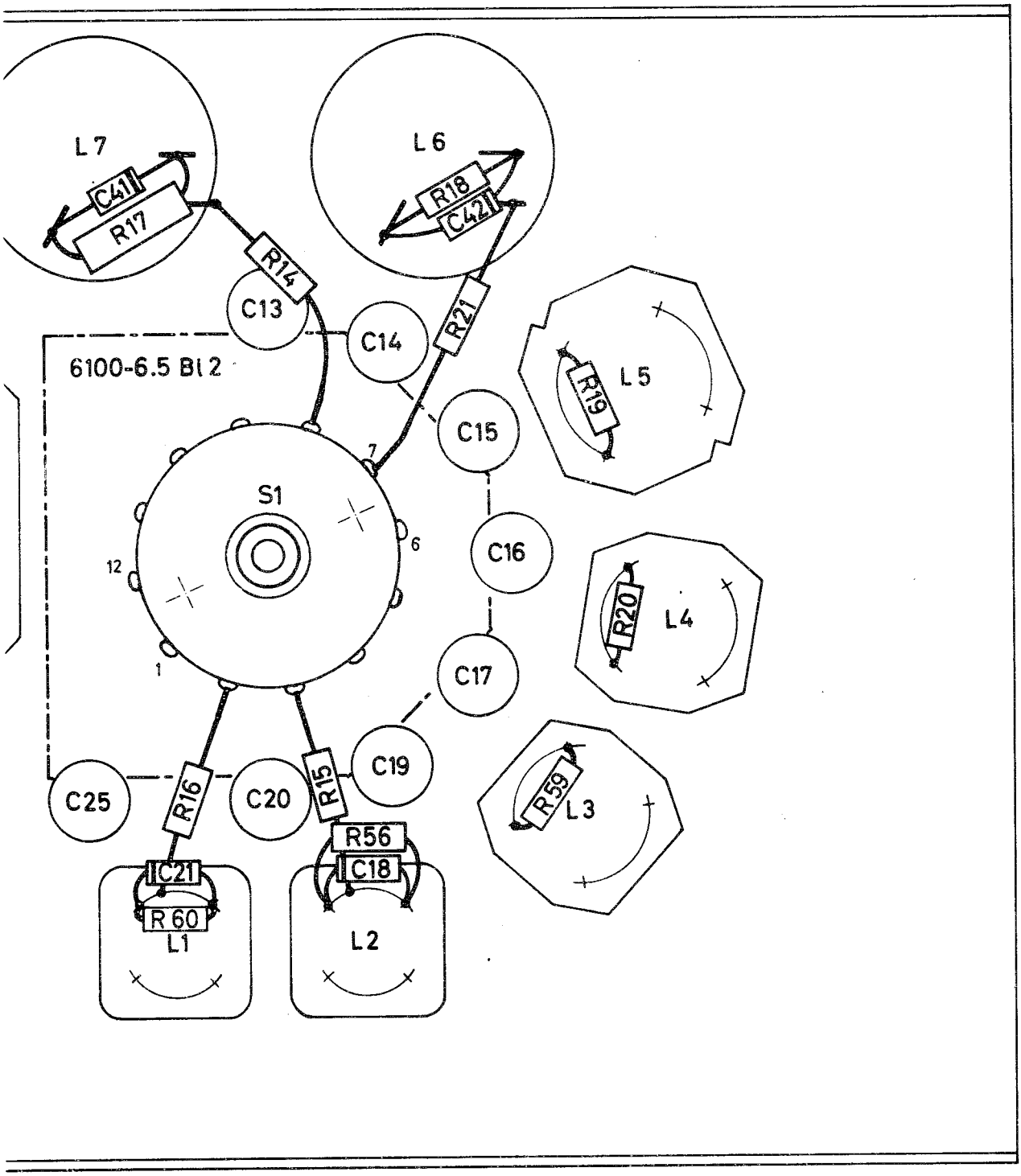

ROHDE & SCHWARZ MÜNCHEN			Halbzeug, Werkstoff				Untolerierte Maße	Zeichn. Nr.
							Maßstab	610
1CDE	Datum	Name	Änd. zust.	Änd.-Mittlg. Nr.	Datum	Name		Ersatz f. Zeichn.
gezeichnet	4.67		a	—	4.9.67	Pe-ka		
bearbeitet			d	13498	17.1.68	Ka	Spulenplatte	
geprüft								
no mgepr.								

tauchgelötet nach HVN 230

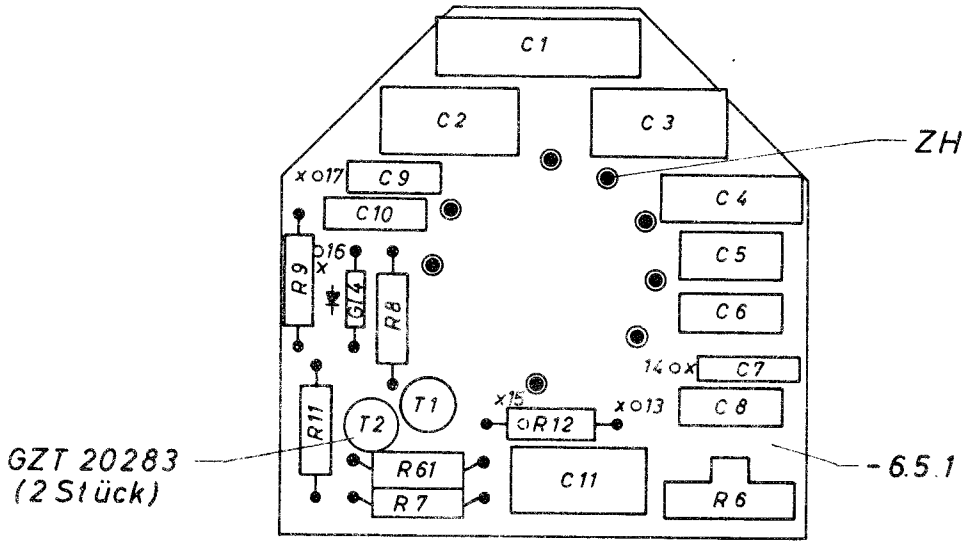

x KLL 30304 (5 Stück)
von unten eingesetzt

Zeichnung besteht aus 2 Blatt
hierzu 6100 - 6.5 St

Diese Zeichnung ist unser Eigentum Vervielfältigung, unbefugte Verwertung, Mitteilung an andere ist strafbar und schadenersatzpflichtig.

ROHDE & SCHWARZ
MÜNCHEN

Halbzeug, Werkstoff

Untolerierte Maße

Maßstab 1 : 1

Zeichn. Nr. 6100 - 6.5 Bl. 1

Ersatz f. Zeichn.

1CDD	Datum	Name	Änd. zust.	Änd.-Mittlg. Nr.	Datum	Name
gezeichnet	8.7.67	Wh.	a	12943	19.7.67	Fre
bearbeitet			b	13214	16.10.67	Ka
geprüft			c	13498	18.1.68	Fre
normgepr.						

Platte (Gr)

Auf Leiterseite gesehen

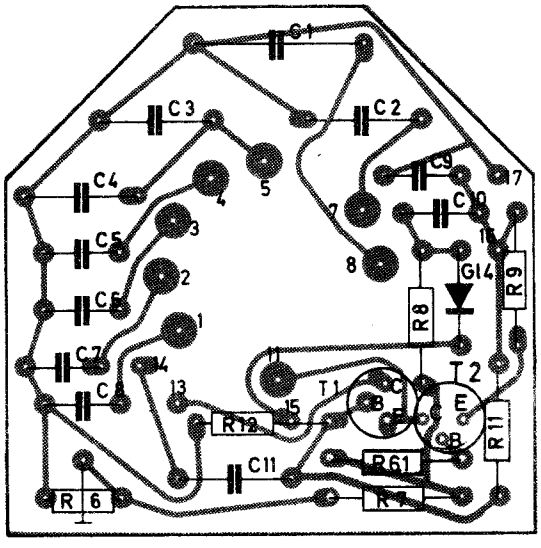

Diese Zeichnung ist unser Eigentum. Vervielfältigung, unbefugte Verwertung, Mitteilung an andere ist strafbar und schadenersatzpflichtig.

ROHDE & SCHWARZ MÜNCHEN			Halbzeug, Werkstoff				Untolerierte Maße	Zeichn. Nr.
1CDE	Datum	Name	Änd. zust.	Änd. Mittlg. Nr.	Datum	Name	Maßstab 1:1	6100 - 6.5 Bl. 2
gezeichnet	13.9.67	Wil	C	13498	22.1.68	Pe-ko		Ersatz f. Zeichn.
bearbeitet		Ka					Platte (Gr.)	
geprüft								
normgepr.								

tauchgelötet nach HVN 230

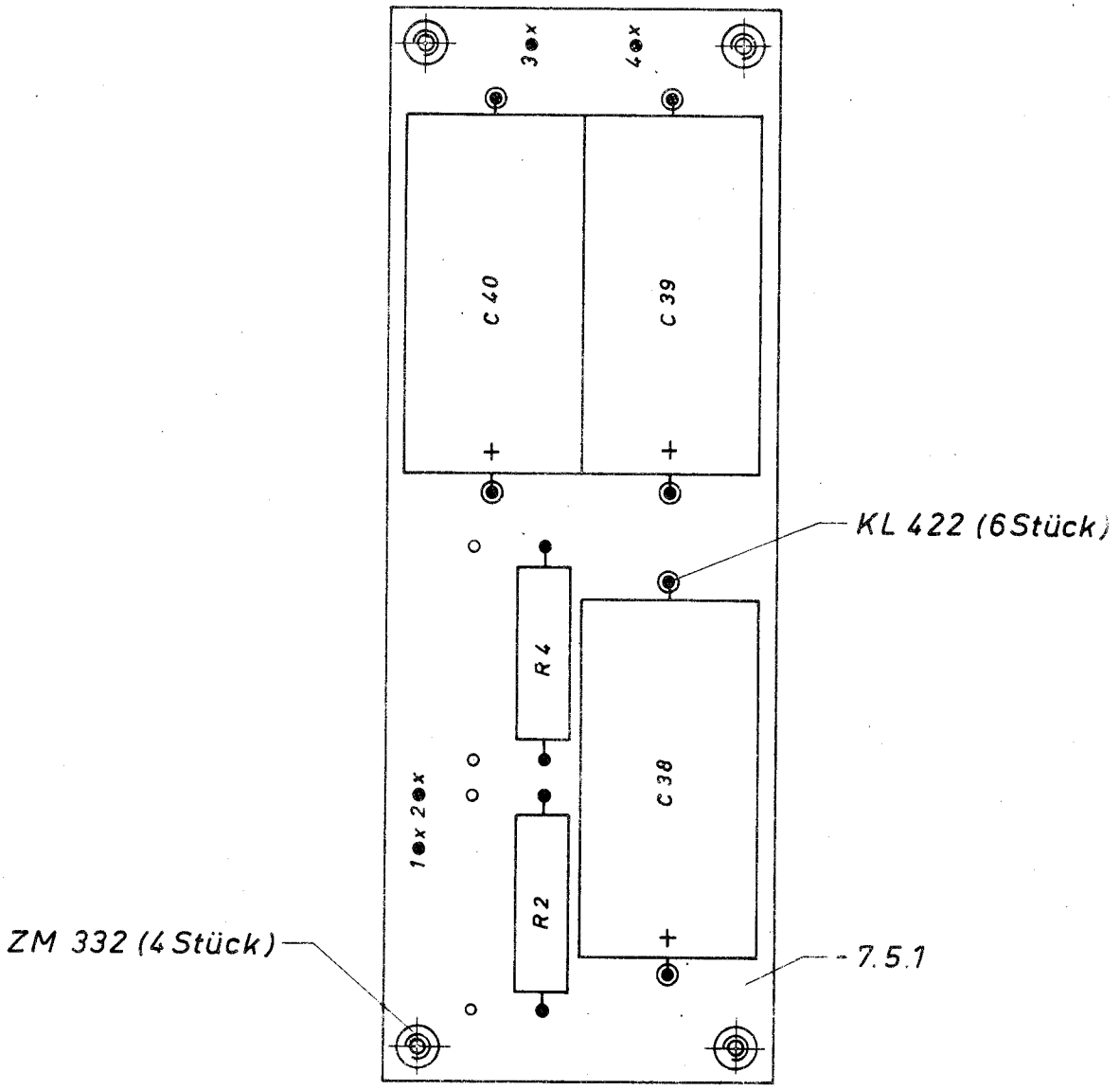

x KLL 30804 (4 Stück)

ZM 332 vor dem Tauchlöten mit Klebeband abgedeckt
C 38, C 39 und C 40 nach dem Tauchlöten gelötet nach HVM 230

Zeichnung besteht aus 2 Blatt
hierzu 6100 - 7.5 St

Diese Zeichnung ist unser Eigentum Vervielfältigung, unbefugte Verwertung, Mitteilung an andere ist strafbar und schadenersatzpflichtig.

ROHDE & SCHWARZ MÜNCHEN			Halbzeug, Werkstoff				Untolerierte Maße	Zeichn. Nr.
								6100 - 7.5 Bl. 1
1CDD	Tag	Name	Änd. zust.	Änd.-Mittlg. Nr.	Tag	Name	Maßstab 1:1	Ersatz f. Zeichn.
gezeichnet	15.9.66	Wm	a	13214	16.10.67	Ka		
bearbeitet							Platte (Gr.)	
geprüft								
normgeps.								

Auf Leiterseite gesehen

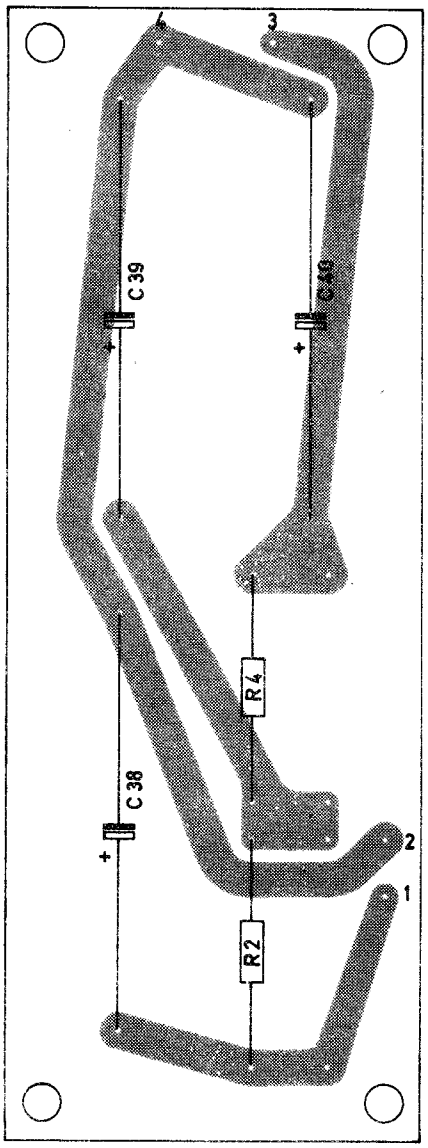

Diese Zeichnung ist unser Eigentum Vervielfältigung, unbefugte Verwertung, Mitteilung an andere ist strafbar und schadenersatzpflichtig.

ROHDE & SCHWARZ MÜNCHEN			Halbzeug, Werkstoff		Untolerierte Maße	Zeichn. Nr.
1 CDE	Datum	Name	Änd. zust.	Änd. Mittlg. Nr	Datum	Name	Maßstab 1 : 1	6100 – 7.5 Bl. 2
gezeichnet	22.9.67							Ersatz f. Zeichn.
bearbeitet		Ka					Platte (Gr.)	
geprüft								
normgepr.								

[illegible]-Vorschrift Nr. R [illegible]

zur ~~deutschen~~ englischen Gerate ~~Grundgerate Einschub Zusatzgerate~~ [illegible]
~~Einsatz Rahmen Anlagen~~ - Beschreibung für

Typ LRT BN 6100 FNr. M 1521/1...250

Zusammenstellung . . . . . nach Pos.-Nr.
Umschlag . . . . . Karton mit Rückenbindung
~~Kunststoffordner 40 mm~~
~~Kunststoffordner 60 mm~~
~~ohne, dafür 4fachlochung mit Banderole~~
Umschlagbeschriftung . . . . auf 1. Seite nach Vorlage R 16602 Bl.0
~~auf Rücken nach Vorlage R~~
Register . . . . . ~~Nr. 4319 (-1--10)~~
~~Nr. 4320 (-11--20)~~
~~Nr. 4321 (-21--30)~~
~~Nr. 4322 (-31--40)~~

Pos.-Nr.	Teil	Sach-Nr.	Blatt-Nr.	AZ	Bemerkung
1	Titelblatt	R 16602	1		
2	Hinweisblatt	R 14500			
3	Beschreibung	R 16602	2...5		
4	"	R 14926	6		
5	"	R 16602	6		
6	"	R 14926	8...12		
7	"	R 16602	7...10		
8	"	R 14926	17...20		
9	"	R 16602	11...14		
10	"	R 14926	23		
11	"	R 16602	15...17		
12	"	R 14926	27...31		
13	"	R 16602	18...20		
14	"	R 14926	35		
15	"	R 16602	21		
16	"	R 14926	37		
17	"	R 16602	22		
18	"	R 14926	39...43		
19	"	R 16602	23...27		
20	Übers.-Liste	R 16602	28...32		
21	Zeichnungen	R 16070	52...62		
22	Übers.-Liste	R 14000	1...10		

5 KWB	Name	Datum
bearb.	Fiebiger	29.7.69
geschr.	Fiebiger	30.7.69
geprüft	Fie	30.7.69

Liste besteht aus 2 Blatt R 17462 Bl. 1

4463/768 Bl.1

25	Übers.-Liste	R 14926	52	
26	Schaltteilliste	6100 Sa	1	r
27	"	"	2	h
28	"	"	3	h
29	"	"	4	h
30	"	"	5	f
31	"	"	6	f
32	"	"	7	c
33	"	"	8	h
34	Übers.-Liste	R 14926	53	
35	Stromlauf	6100 S		c
36	Positionierungsplan	6100-1	2	a
37	"	6100-1.10	1	a
38	"	6100-1.10	2	-
39	"	6100-5	1	c
40	"	6100-5	2	-
41	"	6100-6	2	d
42	"	6100-6.5	1	c
43	"	6100-6.5	2	c
44	"	6100-7.5	1	a
	Zusammenst.-Vorschr.	R 17462	2	-